2.2

HP4VG SERIES

Swash-plate Type
Axial Piston Variable Displacement Pump

HP4VG series axial piston pump is a newly-developed high pressure closed circuit pump, which can meet the application requirements of customers for harsh working conditions such as high pressure, high rotational speed and frequent impact.

Suitable for a high-pressure closed circuit

Size (cc/rev):	45	60	75	100	135	145	175	280
Rated pressure (bar):	380	400	400	400	400	450	450	450
Max. pressure (bar):	420	450	450	450	450	500	500	500

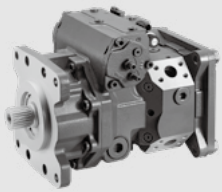

Contents

Features

- ◁ Variable axial piston pump of swashplate design for hydrostatic drives in closed circuit.
- ◁ Flow direction changes smoothly when the swashplate is moved through the neutral position.
- ◁ Two pressure relief valves are installed on the high-pressure side to prevent overload.
- ◁ The built-in charge pump acts as charge pump and control pump.
- ◁ The maximum charge pressure is limited by the built-in low pressure relief valve.
- ◁ New rotary components and bearings, make the transmission efficiency improved, and the input speed increased.
- ◁ The HP4VG175 pump adopts an integrated design at the rear of the housing to reduce leaking points.
- ◁ Optimized shell design to reduce vibration and noise.
- ◁ Electric proportional displacement control meets the application requirements of multiple industries.
- ◁ Various oil outlet connection methods help to optimize pipeline connection.
- ◁ HP4VG175 pump can be optionally equipped with a flush valve, which can be directly installed on the pump body.

Technical data

Size			45	60	75	100	135	145	175	280
Displacement (cc/rev)			45	60	75.6	100	135	145.3	175.4	280
Speed	Rated (rpm)		3300	3600	3300	3000	2850	2850	2650	2400
	Max. (rpm)		3550	3900	3600	3300	3250	3000	2800	2550
	Min. (rpm)		500	500	500	500	500	500	500	500
Pressure	Rated (bar)		380	400	400	400	400	450	450	450
	Max. (bar)		420	450	450	450	450	500	500	500
	Minimum low loop pressure (bar) (Above charge pump)		10	10	10	10	10	10	10	10
Charge pump displacement (cc/rev)			8.6/11.6	11.6	17/21/27		28.3	32	26/39	60
Charge pressure (relative to Charge pump)	Max. (bar)		35	40	40	40	40	40	40	40
Casting pressure	Rated (bar)		2	2	2	2	2	2	2	2
	Max. (bar)(Short-time peak pressure)		3.0	5.0	5.0	5.0	5.0	5.0	5.0	5.0
Suction pressure (Absolute pressure)	Rated (bar) Oil viscosity ≤ 30mm²/s		0.8	0.8	0.8	0.8	0.8	0.8	0.8	0.8
	Max. (bar)		5	5	5	5	5	6	6	5
Oil viscosity (mm²/s)			10~1000, Best range: 16~36							
Oil temperature (°C)			-20~95							
Oil cleanliness			ISO 4406 Class 20/18/15 or higher							
Weight (w/o auxiliary flange) (Kg)			33	38	58	62	82	110	115	179.4

Permissible input and through-drive torques										
Size			45	60	75	100	135	145	175	280
Torque at $V_{g\,max}$ and Δp = 400 bar Nm			287	255	477	636	859			
at $V_{g\,max}$ and Δp = 450 bar Nm								1253	1253	2005
Maximum input torque at drive shaft (Nm)										
ANSI B92.1a–1976	S0	1 in 15T 16/32DP	272							
	S1	1 1/4 in 14T 12/24 DP	552	602	650	650				
	S2	1 3/8 in 21T 16/32 DP		970	970	970				
	S3	1 1/2 in 23T 16/32 DP			1305	1305				
	S4	1 3/4 in 13T 8/16 DP			1640	1640	1640	1640	1640	
	S5	2 1/4 in 17T 8/16 DP						4070	4070	
	S6	27T 16/32 DP					1830			
	S7	2 in 15T 8/16DP								2670
DIN 5480	T1	W30×2×14×9g		522						
	T2	W35×2×16×9g		912	912	912				
	T3	W45×2×21×9g				2190				
	T4	W50×2×24×9g						3140	3140	
	T5	W40×2×18×9g			1460	1460	1460			
	T6	W55×2×26×9gw								4350
Maximum through-drive torque (Nm)			314	314	660	822	1110	1760	1760	2641

Type introduction

HP4V	G		EP3	D	M	P	R	/	R	N	C2	S1	02	F	B1	3	S	-	S
①	②	③	④	⑤	⑥	⑦	⑧		⑨	⑩	⑪	⑫	⑬	⑭	⑮	⑯	⑰		⑱

Axial piston unit

①	Swashplate design, variable, nominal pressure 380~450 bar, maximum pressure 420~500 bar	HP4VG

Operating mode

②	Pump, closed circuit	G

Displacement

③	Displacement cc/rev	45	60	75	100	135	145	175	280

Control device

④	Proportional control, electric U = 12 V DC	EP3
	Proportional control, electric U = 24 V DC	EP4
	Mechanical servo control	HW
	Hydraulic pilot proportional control	HD

Pressure cut-off

⑤	Without pressure cut-off	Blank
	Pressure cut-off	D
	AB port control	T

Mechanical displacement limitation

⑥	Without mechanical displacement limitation	Blank
	Mechanical displacement limitation	M

Connector for solenoids

⑦	Without connector (only for purely hydraulic control)	Blank
	Deutsch molded connector, Deutsch DT04-2P without suppressor diode	P

Swivel angle sensor

⑧	Without swivel angle sensor	Blank
	Swivel angle sensor (not available yet, to be developed)	R

Type introduction

Direction of Rotation

	Direction of Rotation	45	60	75	100	135	145	175	280	Code
⑨	Viewed on drive shaft, clockwise	●	●	●	●	●	●	●	●	R
	Viewed on drive shaft, counter-clockwise	●	●	○	○	●	●	●	○	L

Sealing material

⑩	NBR (nitrile rubber) Shaft seal in FKM (fluoroelastomer)	N

Mounting flange

	Mounting flange	45	60	75	100	135	145	175	280	Code
⑪	SAE B J744-101-2	●								B2
	SAE C J744-127-2		●							C2
	SAE C J744-127-4			●	●					C4
	SAE D J744-152-2/4					●	●	●		D4
	SAE E J744-165-4						●	●	●	E4

Drive shaft

	Drive shaft		45	60	75	100	135	145	175	280	Code
⑫	Splined shaft ANSI B92.1a	1 in 15T 16/32 DP	●								S0
		1 1/4 in 14T 12/24 DP	●	●	●	●					S1
		1 3/8 in 21T 16/32 DP		●	●	○					S2
		1 1/2 in 23T 16/32 DP			●	●					S3
		1 3/4 in 13T 8/16 DP			●	●	●	●	●		S4
		2 1/4 in 17T 8/16 DP						●	●	●	S5
		27T 16/32DP					●				S6
		2 in 15T 8/16DP								●	S7
	Splined shaft DIN 5480	W30×2×14×9g		○		○					T1
		W35×2×16×9g		○	○	●					T2
		W45×2×21×9g				○					T3
		W50×2×24×9g						●	●		T4
		W40×2×18×9g			●	○	●				T5
		W55×2×26×9g								●	T6

Working port

	Working port	45	60	75	100	135	145	175	280	Code
⑬	Same-side SAE flange port A and B	●	●	●	●					1
	Off-side SAE flange port A and B	○	●	●	●	●				2
	SAE working port A and B, on right side (45° right)						●	●	●	3

Type introduction

Boost pump and rotary group configuration

⑭	Standard rotary group, without boost pump										K
	Standard rotary group, boost pump integrated	Charge pump displacement (cc/rev)	45	60	75	100	135	145	175	280	Code
		8.6	●								F0
		11.6	●	●							F1
		17			●	●					F2
		21			●	●					F3
		26						●	●		F4
		27			●	●					F5
		28.3					●				F6
		39						●	●		F7
		60								●	F8
	High speed rotary group, boost pump integrated (only for HP4VG175)	Charge pump displacement (cc/rev)									Code
		26									H1
		39									H2

Through drive

⑮	Through drive		45	60	75	100	135	145	175	280	Code
	Without through drive			●	●	●		●	●		None
	Flange	Splined shaft									
	SAE A 82-2	SAE J744-16-4 9T 16/32 DP	●	●	●	●	●				A1
		SAE J744-19-4 11T 16/32 DP			●	●					A2
	SAE B 101-2	SAE J744-22-4 13T 16/32 DP	●	●	●	●	●	●	●	●	B1
		SAE J744-25-4 15T 16/32 DP	●	●	●	●		●	●	●	B2
	SAE C 127-2	SAE J744-44-4 14T 12/24 DP			●	●					C1
	SAE C 127-4	SAE J744-44-4 14T 12/24 DP			●	●				●	C3
		DIN 5480 W35×2×19×9g				●					C5
	SAE C 127-2/4	SAE J744 14T 12/24 DP					●	●	●		E2
		SAE J744 13T 8/16 DP								○	E4
	SAE D 152-4	SAE J744-44-4 13T 8/16 DP					●	●	●		D1
		SAE J744-44-4 N40×2×18×9g								●	D2
	SAE E 165-4	SAE J744-44-4 13T 8/16 DP						●	●		E1
		SAE J744-44-4 15T 8/16 DP								●	E3

Type introduction

High-pressure relief valve

⑯	High-pressure relief valve	Setting range Δp	45	60	75	100	135	145	175	280	Code
	Pilot-operated high-pressure relief valve	100~420bar, with a bypass			●	●	●				1
	Direct-acting high-pressure relief valve, fixed setting	250~420bar, without a bypass	●	○	●	●					3
		250~420bar, with a bypass	●	●							5
		100~250bar, without a bypass	●	○							4
		100~250bar, with a bypass	○	○							6
		450bar, without a bypass						●	●	●	7

Filtration boost circuit/external boost pressure supply

⑰	Filtration in the boost pump suction line	S
	Filtration in the boost pump pressure line (ports with external filter circuit)	D
	Filtration in the boost pump pressure line (with filter)	F
	Filtration in the boost pump pressure line (with filter, cold start valve, contamination indicator)	B

Standard / special version

⑱	Standard version							S
	Special version	With neutral position switch						K
		Emergency return valve (Brake unloading valve)						F
		With flush valve	Flushing flow (L/min)	Code		Flushing flow (L/min)	Code	Opening pressure 16bar, differential pressure ΔP=25bar
			10	A		20	C	
			15	B		25	D	

Remark: ● = Available; ○ = On request

Hydraulic fluid

The axial piston unit is designed for operation with HLP mineral oil according to DIN 51524. Application instructions and requirements for hydraulic fluid selection, behavior during operation as well as disposal and environmental protection should be taken from the following data sheets before the start of project planning:

·90220: Hydraulic fluids based on mineral oils and related hydrocarbons

·90221: Environmentally acceptable hydraulic fluids

·90222: Fire-resistant, water-free hydraulic fluids (HFDR/HFDU)

·90225:Limited technical data for operation with waterfree and water-containing fire-resistant hydraulic fluids (HFDR, HFDU, HFAE, HFAS, HFB, HFC)

Selection of hydraulic fluid

Evaluates hydraulic fluids on the basis of the Fluid Rating according to the technical data sheet 90235. Hydraulic fluids with positive evaluation in the Fluid Rating are provided in the following technical data sheet:

·90245: Fluid Rating List for hydraulic components (pumps and motors)

The hydraulic fluid should be selected so that the operating viscosity in the operating temperature range is within the optimum range (vopt; see selection diagram).

·Viscosity and temperature of hydraulic fluids

	Viscosity (mm^2/s)	Shaft seal	Temperature	Comment
Cold start	$v_{max} \leqslant 7400$ (1600)	NBR	θSt ⩾ -40°C	t ⩽ 3min, without load(p ⩽ 725psi(50bar), n ⩽ 1000rpm Permissible temperature difference between axial piston unit and hydraulic fluid in the system maximum 45 °F (25 K).
		FKM	θSt ⩾ -25 °C	
Warm-up phase	v = 7400 ··· 1850 (1600 ··· 400)			t ⩽ 15min, p ⩽ 0.7×p_{nom} and n ⩽ 0.5×n_{nom}
Continuous operation	v = 1850 ··· 60 (400 ··· 10)	NBR	θ ⩽ +85 °C	measured at port T
		FKM	θ ⩽ +110°C	
	v_{opt} = 170 ··· 82 (36 ··· 16)			Range of optimum operating viscosity and efficiency
Short-term operation	v_{min} = 60 ··· 49 (10 ··· 7)	NBR	θ ⩽ +85°C	t ⩽ 3min, p ⩽ 0.3×p_{nom}, measured at port T
		FKM	θ ⩽ +110°C	

·Selection diagram

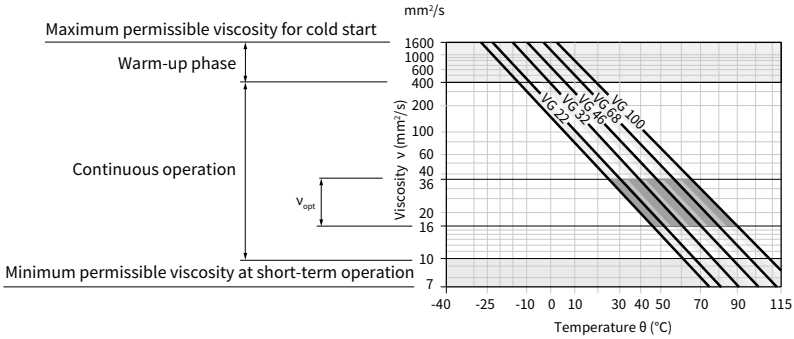

·Filtration of the hydraulic fluid

Finer filtration improves the cleanliness level of the hydraulic fluid, which increases the service life of the axial piston unit.

A cleanliness level of at least 20/18/15 is to be maintained according to ISO 4406.

At a hydraulic fluid viscosity of less than 10 mm²/s (e.g. due to high temperatures during short-term operation) at the drain port, a cleanliness level of at least 19/17/14 according to ISO 4406 is required.

Shaft seal

Permissible pressure loading

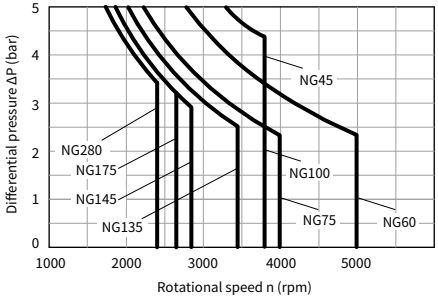

Notice

·Working pressure range valid when using hydraulic fluids based on mineral oils. Please contact us for values for other hydraulic fluids.

·In addition to the hydraulic fluid and the temperature, the service life of the shaft seal is influenced by the rotational speed of the axial piston unit and the case pressure.

·The service life of the shaft seal decreases with increasing frequency of pressure peaks and increasing mean differential pressure.

·The case pressure must be greater than the ambient pressure.

EP - Electrical displacement control

·Electrical displacement control principle

The output flow of the pump is infinitely variable between 0 and 100%, proportional to the electrical current sup-plied to solenoid a or b.
The electrical energy is converted into a force acting on the control spool.
This control spool then directs control oil into and out of the stroking cylinder to adjust pump displacement as required.
A feedback lever connected to the stroking piston main-tains the pump flow for any given current within the con-trol range.

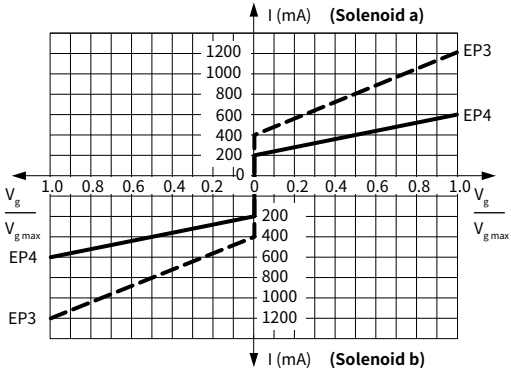

Standard:
Proportional solenoid without manual emergency operation.
Supply as required:
Proportional solenoid with manual emergency operation and spring return.

Technical data, solenoid

Control		EP3	EP4
Voltage		12 V (±20%)	24 V (±20%)
Control current	Start of control at V_g=0	400 mA	200 mA
	End of control at $V_{g\,max}$	1200 mA	600 mA
Current limit		1540 mA	840 mA
Nominal resistance (at 68 °F (20°C)		5.5 Ω	21.7 Ω
Dither frequency		100Hz / 120Hz (120Hz only for the HP4VG175 closed pumps)	
Duty cycle		100%	
Type of protection		See connector version	

Note:
The spring-return device in the control module is not a safety device
The control module may be stuck in an uncertain position by internal impurities (hydraulic oil impurities, system component wear or sediment). As a result, the controller can no longer respond correctly to the instruction from the operator.
Check whether additional safety measures are required on your machine to move the drive actuator to a controlled safe position (emergency stop). When necessary, please ensure that these operations are implemented correctly.

HD - Proportional control, hydraulic, pilot-pressure related

·Hydraulic proportional control principle

The output flow of the pump is infinitely variable between 0 and 100%, proportional to the difference in pilot pres-sure applied to the two pilot pressure ports (Y1 and Y2). The pilot signal, coming from an external source, is a pressure signal. Flow is negligible, as the pilot signal acts only on the control spool of the control valve.
This control spool then directs control oil into and out of the stroking cylinder to adjust pump displacement as required.
A feedback lever connected to the stroking piston main-tains the pump flow for any given pilot signal within the control range.

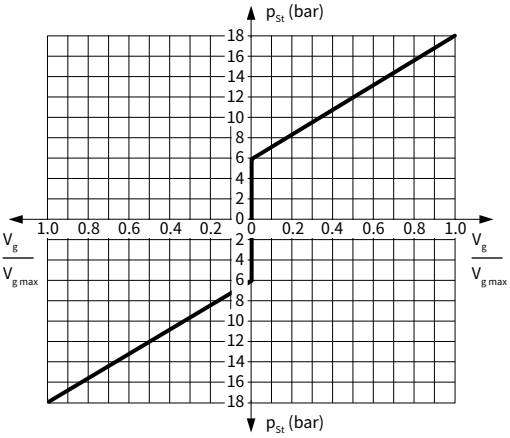

Displacement at Vg = pSt
Displacement at Vg max = pSt = 18bar
Pilot signal pSt = 6 to 18 bar (at port Y1, Y2)
Initial control value at 6 bar pressure
Control termination value when the pressure is 18 bar
(The maximum displacement Vg max)

Note:
In the neutral position, the HD control module must be unloaded to reservoir via the external pilot control device.

Note:
The spring-return device in the control module is not a safety device
The control module may be stuck in an uncertain position by internal impurities (hydraulic oil impurities, system component wear or sediment). As a result, the controller can no longer respond correctly to the instruction from the operator.
Check whether additional safety measures are required on your machine to move the drive actuator to a controlled safe position (emergency stop). When necessary, please ensure that these operations are implemented correctly.

HP4VG 45 Control principle

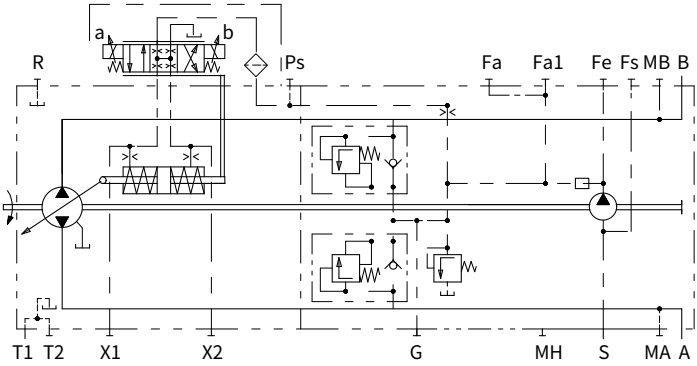

Direction of rotation	Clockwise		Counter-clockwise	
Actuation of proportional solenoid	a	b	a	b
Control pressure	X1	X2	X1	X2
Flow direction	A to B	B to A	B to A	A to B
Working pressure	MB	MA	MA	MB

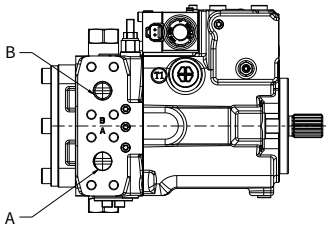

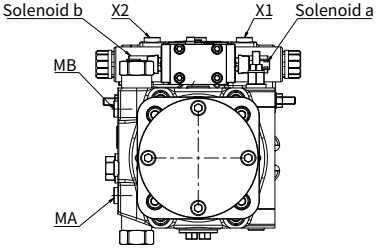

Installation size

HP4VG 45 Installation size

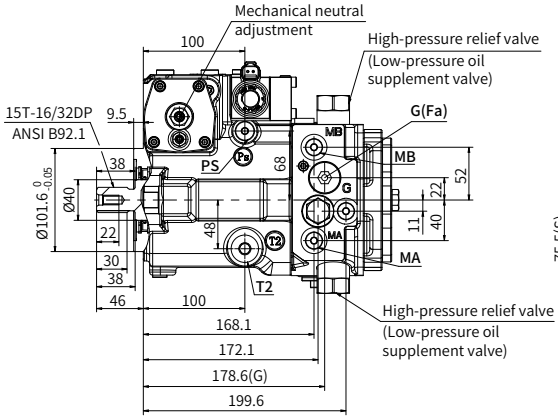

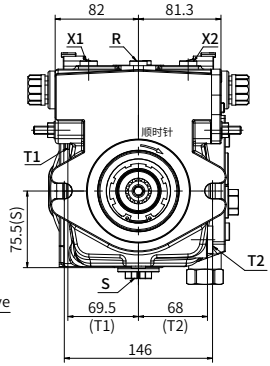

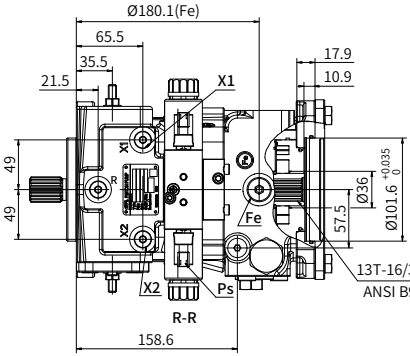

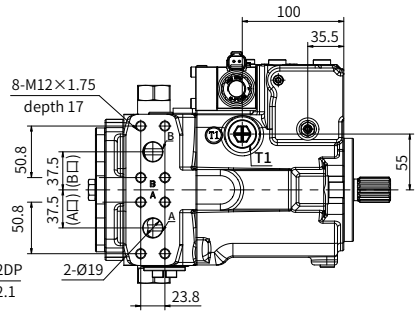

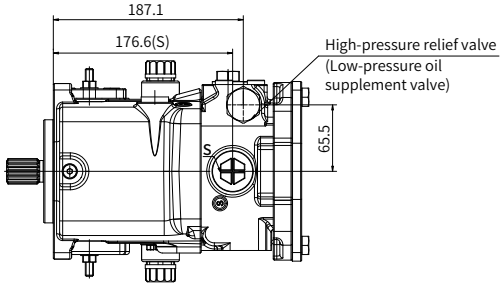

Installation size

·HP4VG 45 Port details

Port	Port Name	Standard	Oil Port Specification (thread depth)
A, B	Working port	SAE J518	3/4"
	Fastening thread	DIN 13	M10（depth 17mm）
S	Suction port	DIN 3852	M33×2（depth 18mm）
T1, T2	Drain port	DIN 3852	M22×1.5（depth 14mm）
R	Air bleed port	DIN 3852	M12×1.5（depth 12mm）
X1, X2	Control pressure port	DIN 3852	M12×1.5（depth 12mm）
P_S	Pilot pressure port inlet	DIN 3852	M14×1.5（depth 12mm）
MA, MB	Measuring port pressure A, B	DIN 3852	M12×1.5（depth 12mm）
G(Fa)	Boost pressure port inlet	DIN 3852	M18×1.5（depth 12mm）
Fe	Charge pressure outlet	DIN 3852	M18×1.5（depth 12mm）

Installation size

·HP4VG 45 Shaft extension type

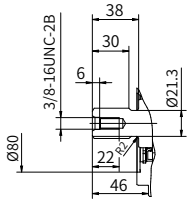

"S0" type spline shaft
ANSI B92.1a
1 in 15T 16/32DP

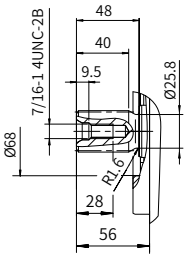

"S1" type spline shaft
ANSI B92.1a
1 1/4 in 14T 12/24DP

02

·HP4VG 45 Through shaft drive

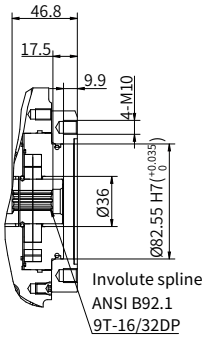

“A1” type through drive

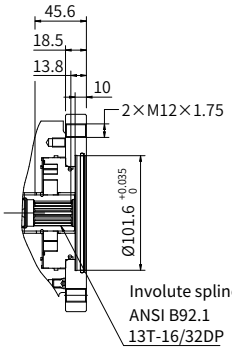

“B1” type type through drive

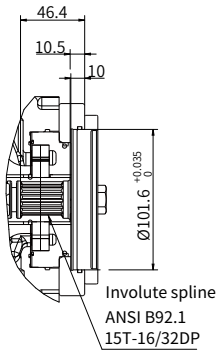

“B2” type through drive

HP4VG 60 Control principle

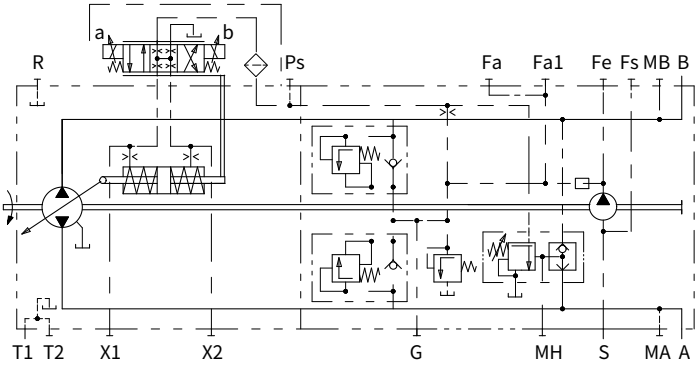

Direction of rotation	Clockwise		Counter-clockwise	
Actuation of proportional solenoid	a	b	a	b
Control pressure	X1	X2	X1	X2
Flow direction	A to B	B to A	B to A	A to B
Working pressure	MB	MA	MA	MB

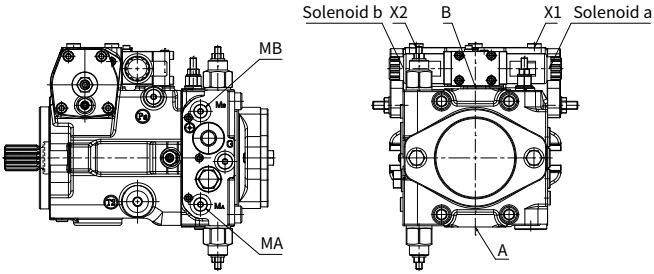

Installation size

HP4VG 60 Installation size

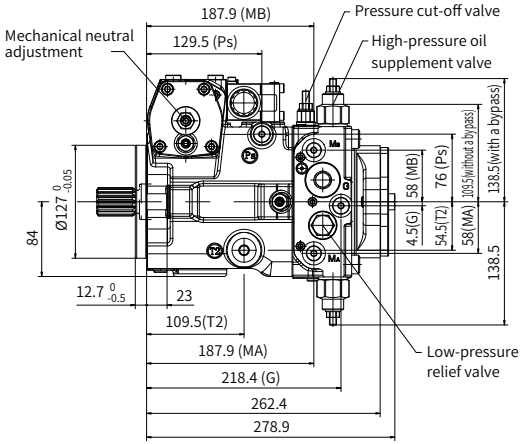

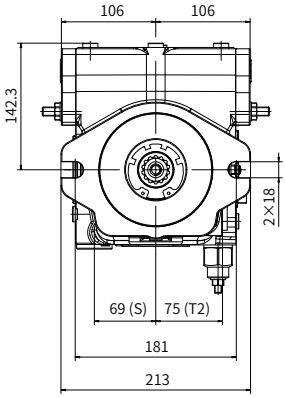

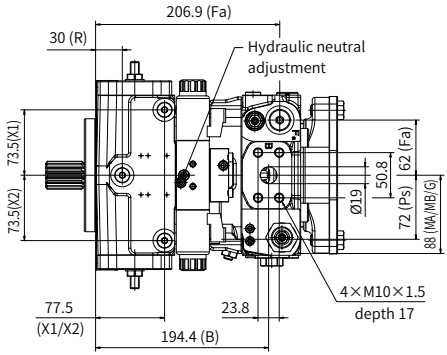

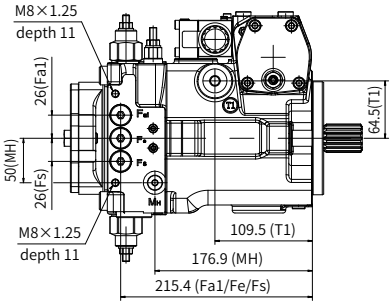

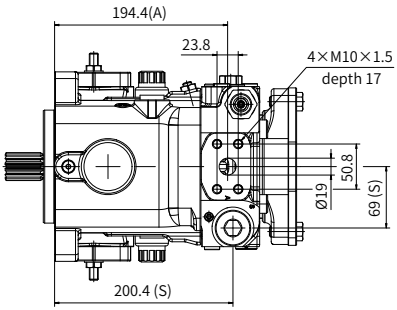

Installation size

·HP4VG 60 Port details

Port	Port Name	Standard	Oil Port Specification (thread depth)
A, B	Working port	SAE J518	3/4"
	Fastening thread	DIN 13	M10×1.5（depth 17mm）
S	Suction port	ISO 9974-1	M33×2（depth 18mm）
T1, T2	Drain port	ISO 9974-1	M22×1.5（depth 14mm）
R	Air bleed port	ISO 9974-1	M12×1.5（depth 12mm）
X1, X2	Control pressure port	ISO 9974-1	M12×1.5（depth 12mm）
G	Boost pressure port	ISO 9974-1	M14×1.5（depth 12mm）
P_S	Pilot pressure port inlet	ISO 9974-1	M14×1.5（depth 12mm）
MA, MB	Measuring port pressure A, B	ISO 9974-1	M12×1.5（depth 12mm）
MH	Measuring port, high pressure	ISO 9974-1	M12×1.5（depth 12mm）
Fa	Boost pressure port inlet	ISO 9974-1	M18×1.5（depth 12mm）
Fa1	Boost pressure port inlet(Filter can be installed)	ISO 9974-1	M18×1.5（depth 12mm）
Fe	Charge pressure outlet	ISO 9974-1	M18×1.5（depth 12mm）
Fs	From the filter to the oil suction line（at cold start)	ISO 9974-1	M18×1.5（depth 12mm）

Installation size

· HP4VG 60 Shaft extension type

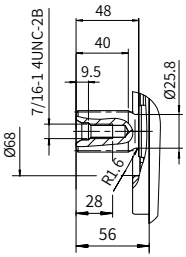

"S1" type spline shaft
ANSI B92.1a
1 1/4 in 14T 12/24DP

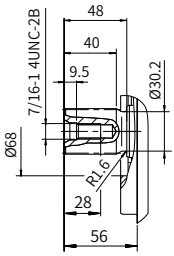

"S2" type spline shaft
ANSI B92.1a
1 3/8 in 21T 16/32DP

02

· HP4VG 60 Through shaft drive

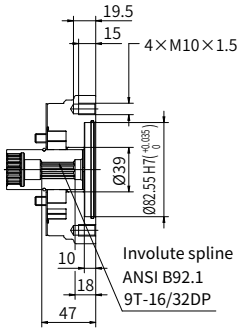

"A1" type through drive

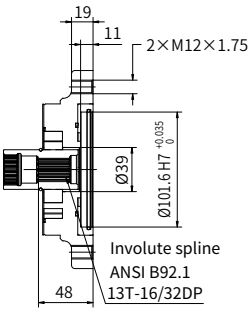

"B1" type through drive

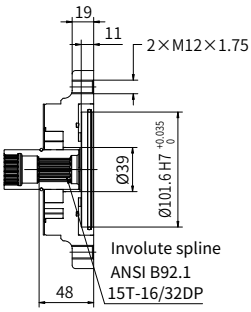

"B2" type through drive

HP4VG 75 Control principle

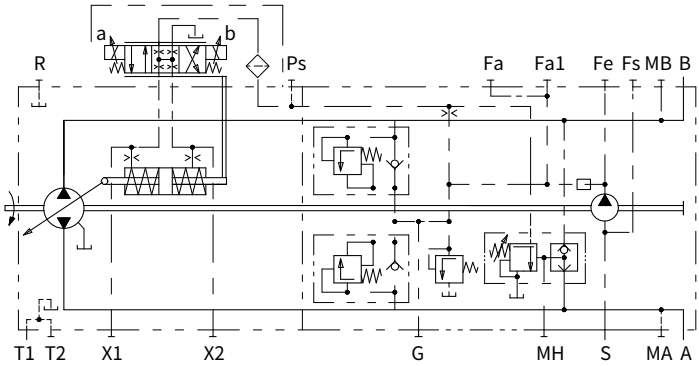

Direction of rotation	Clockwise		Counter-clockwise	
Actuation of proportional solenoid	a	b	a	b
Control pressure	X1	X2	X1	X2
Flow direction	B to A	A to B	A to B	B to A
Working pressure	MA	MB	MB	MA

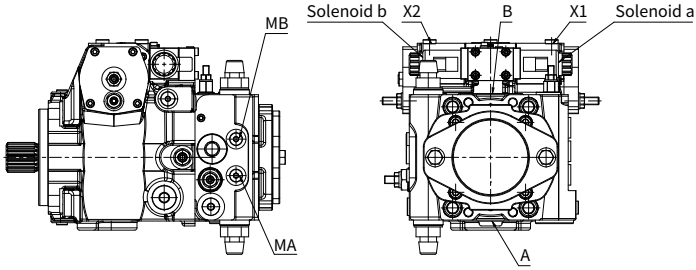

Installation size

HP4VG 75 Installation size

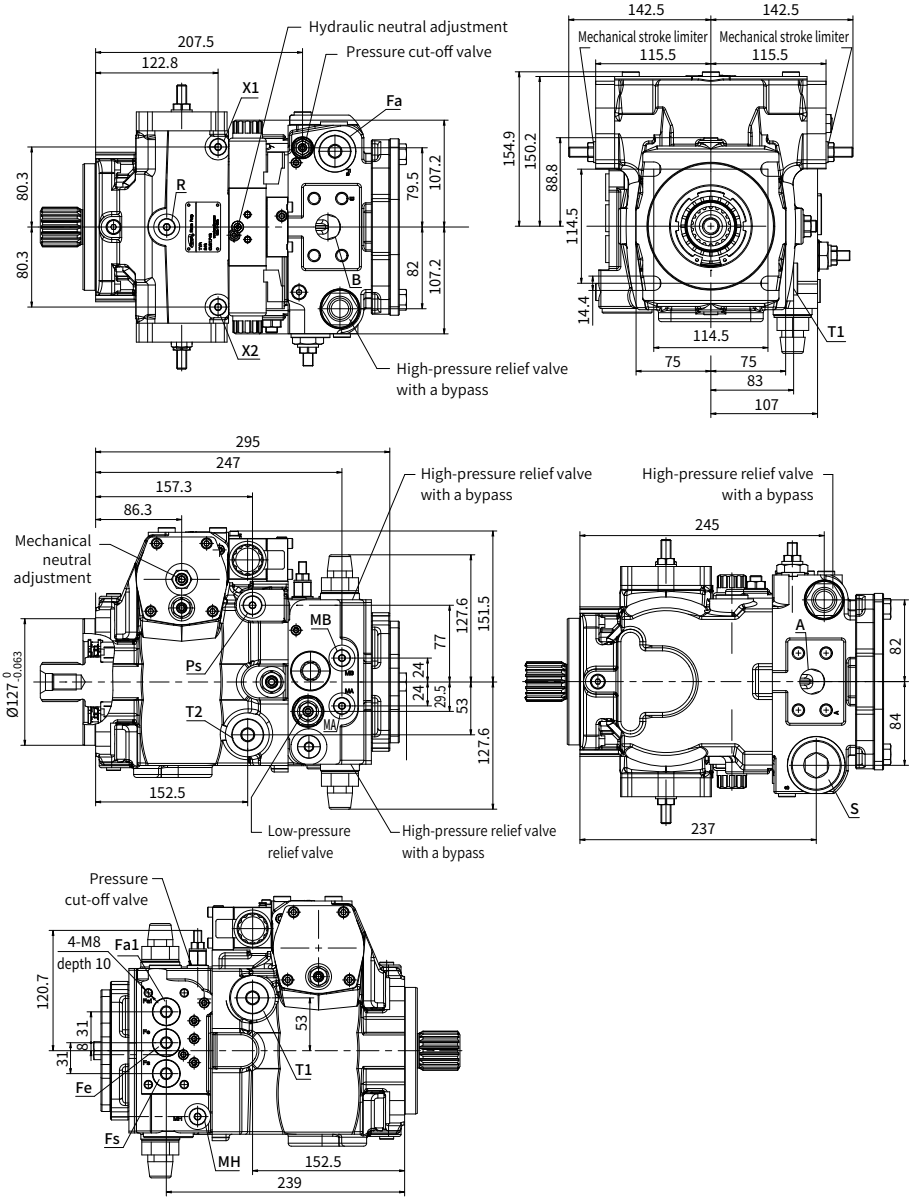

Installation size

·HP4VG 75 Port details

Port	Port Name	Standard	Oil Port Specification (thread depth)
A, B	Working port	SAE J518	1"
	Fastening thread	DIN 13	M12×1.75（depth 17）
S	Suction port	DIN 3852	M42×2（depth 20）
T1, T2	Drain port	DIN 3852	M26×1.5（depth 16）
R	Air bleed port	DIN 3852	M12×1.5（depth 12）
X1, X2	Control pressure port	DIN 3852	M12×1.5（depth 12）
G	Boost pressure port	DIN 3852	M18×1.5（depth 12）
P_S	Pilot pressure port inlet	DIN 3852	M14×1.5（depth 12）
MA, MB	Measuring port pressure A, B	DIN 3852	M12×1.5（depth 12）
MH	Measuring port, high pressure	DIN 3852	M12×1.5（depth 12）
Fa	Boost pressure port inlet	DIN 3852	M26×1.5（depth 16）
Fa1	Boost pressure port inlet (Filter can be installed)	DIN 3852	M22×1.5（depth 14）
Fe	Charge pressure outlet	DIN 3852	M22×1.5（depth 14）
Fs	From the filter to the oil suction line（at cold start)	DIN 3852	M22×1.5（depth 14）

Installation size

·HP4VG 75 Shaft extension type

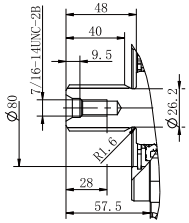

“S1” type spline shaft
ANSI B92.1a
1 1/4 in 14T 12/24DP

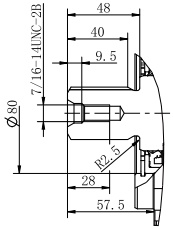

“S2” type spline shaft
ANSI B92.1a
1 3/8 in 21T 16/32DP

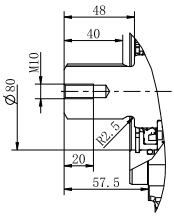

“S3” type spline shaft
ANSI B92.1a
1 1/2 in 23T 16/32DP

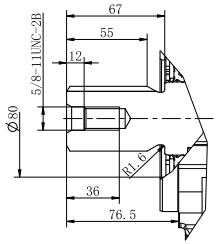

“S4” type spline shaft
ANSI B92.1a
1 3/4 in 13T 8/16DP

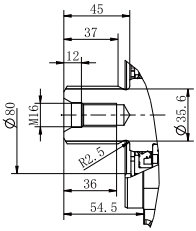

“T5” type spline shaft
DIN 5480
W40×2×18×9 g

Installation size

·HP4VG 75 Through shaft drive

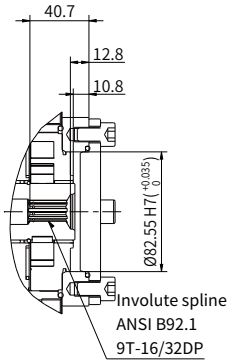

“A1”type through drive

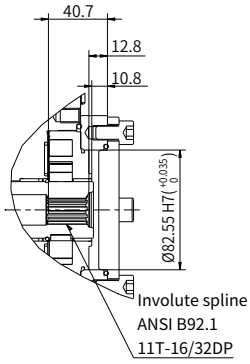

“A2”type through drive

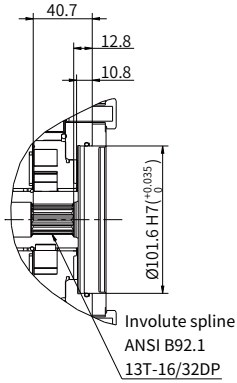

“B1”type through drive

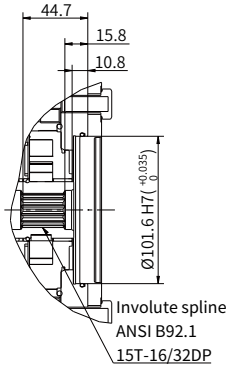

“B2”type through drive

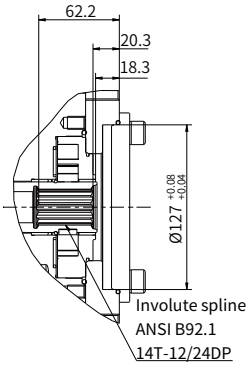

“C1”type through drive

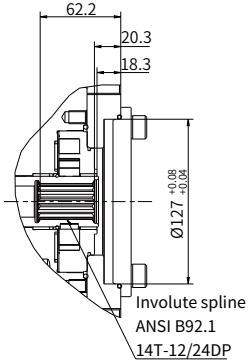

“C3”type through drive

HP4VG 100 Control principle

·HP4VG 100 Port details

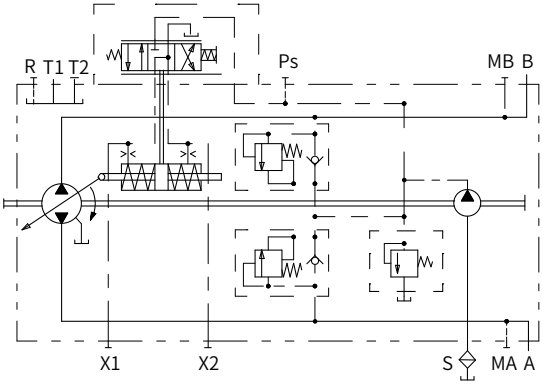

Direction of rotation	Clockwise		Counter-clockwise	
Actuation of proportional solenoid	a	b	a	b
Control pressure	X1	X2	X1	X2
Flow direction	B to A	A to B	A to B	B to A
Working pressure	MA	MB	MB	MA

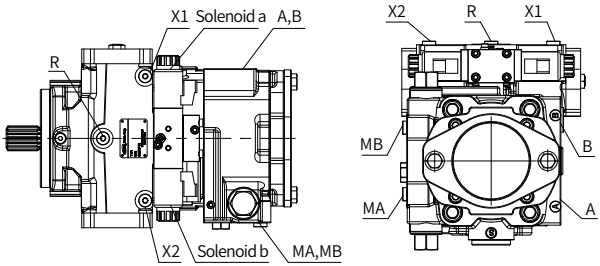

Installation size

HP4VG 100 Installation size

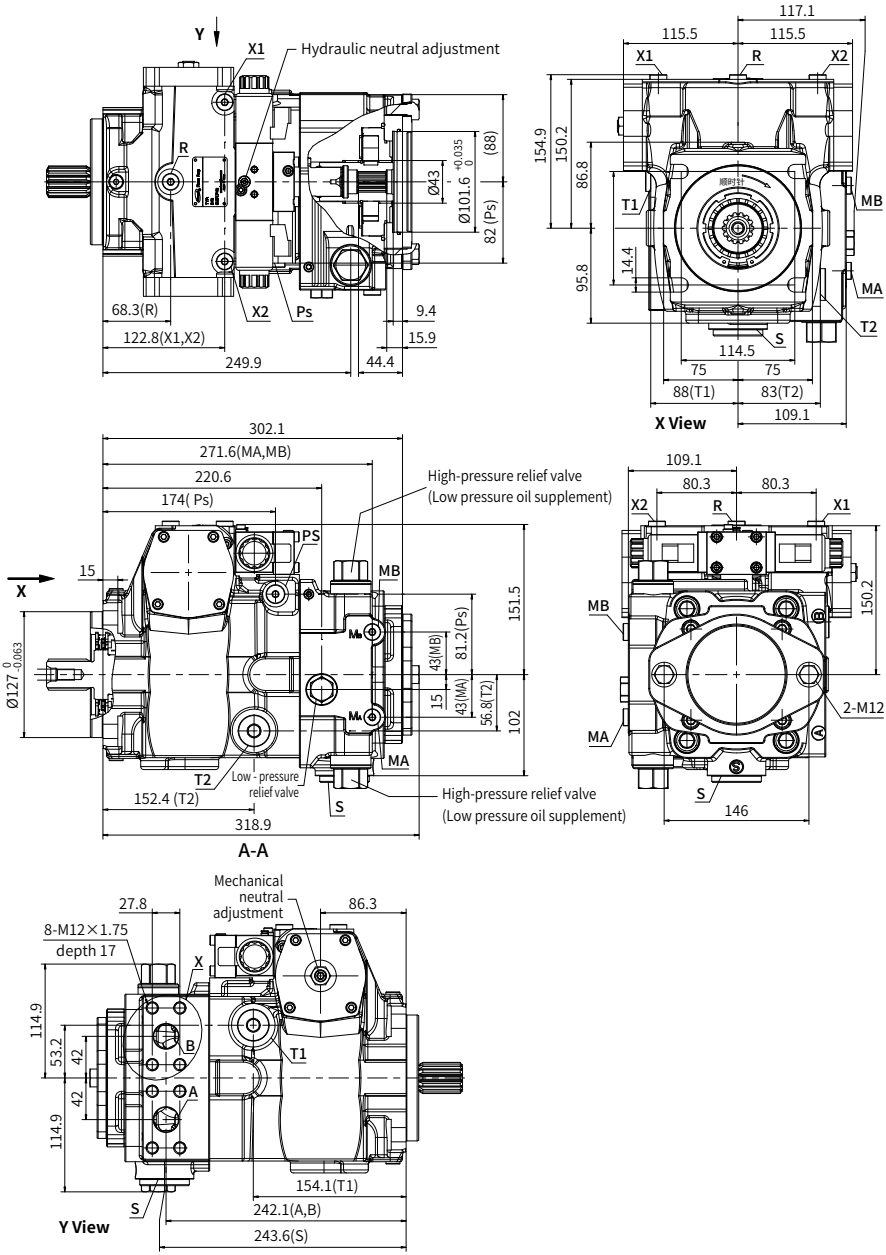

Installation size

·HP4VG 100 Port details

Port	Port Name	Standard	Oil Port Specification (thread depth))
A, B	Working port	SAE J518	1"
	Fastening thread	DIN 13	M12×1.75（depth 17mm）
S	Suction port	ISO 9974-1	M42×2（depth 20mm）
T1, T2	Drain port	ISO 9974-1	M26×1.5（depth 16mm）
R	Air bleed port	ISO 9974-1	M12×1.5（depth 12mm）
X1, X2	Control pressure port	ISO 9974-1	M12×1.5（depth 12mm）
P_S	Pilot pressure port inlet	ISO 9974-1	M14×1.5（depth 12mm）
MA, MB	Measuring port pressure A, B	ISO 9974-1	M12×1.5（depth 12mm）

Installation size

·HP4VG 100 Shaft extension type

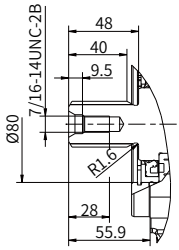

“S1” type spline shaft
ANSI B92.1a
14T-12/24DP

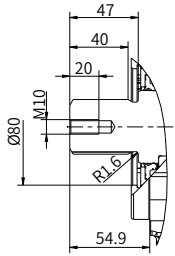

“S3” type spline shaft
ANSI B92.1a
23T-16/32DP

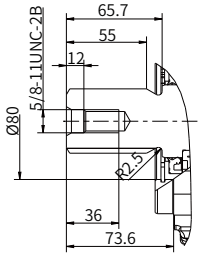

“S4” type spline shaft
ANSI B92.1a
13T-8/16DP

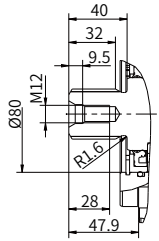

“T2” type spline shaft
DIN 5480
W35×2×16×9 g

02

Installation size

·HP4VG 100 Through shaft drive

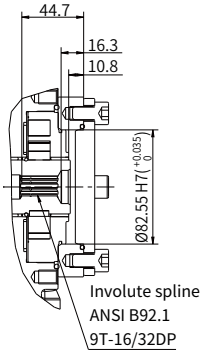

“A1” type through drive

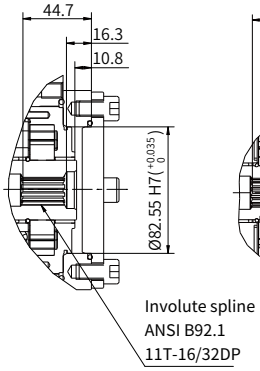

“A2” type through drive

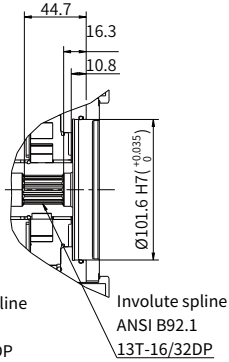

“B1” type through drive

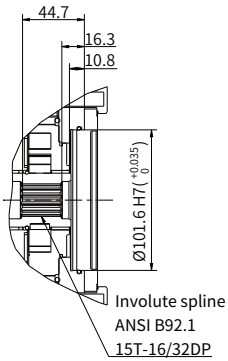

“B2” type through drive

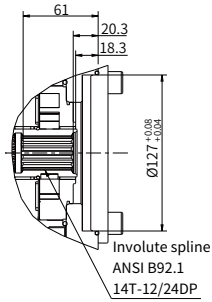

“C1” type through drive

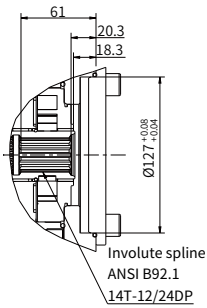

“C3” type through drive

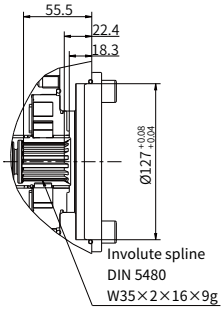

“C5” type through drive

HP4VG 135 Control principle

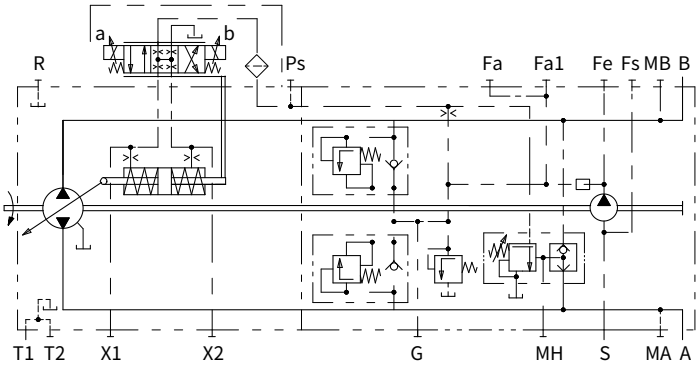

Direction of rotation	Clockwise		Counter-clockwise	
Actuation of proportional solenoid	a	b	a	b
Control pressure	X1	X2	X1	X2
Flow direction	B to A	A to B	A to B	B to A
Working pressure	MA	MB	MB	MA

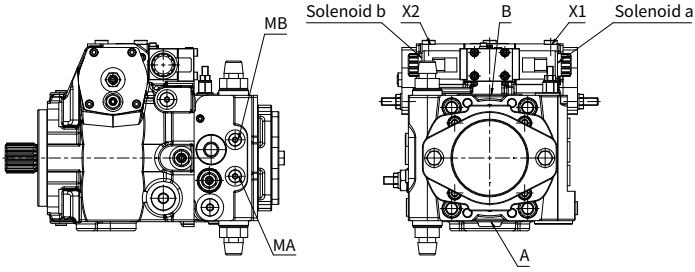

Installation size

HP4VG 135 Installation size

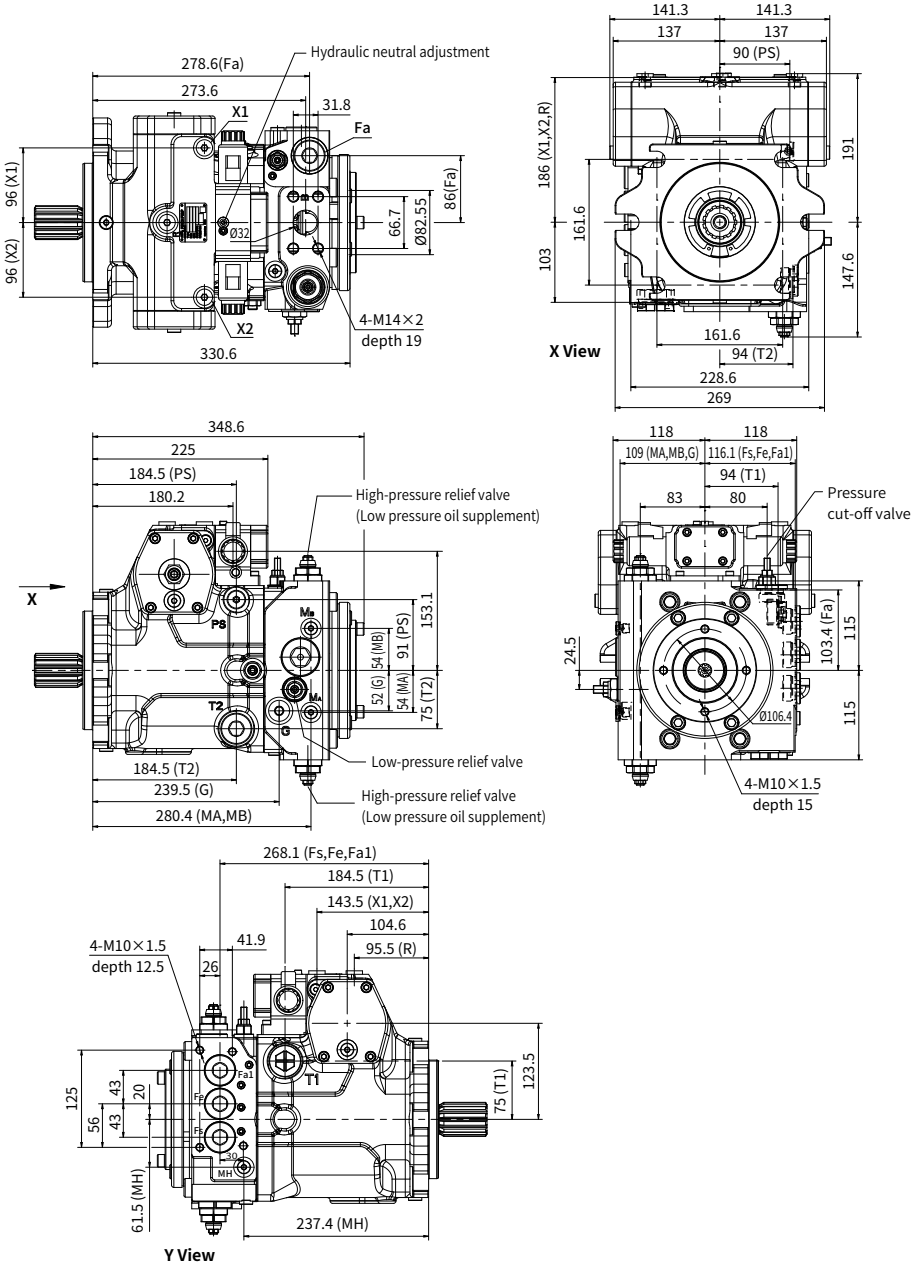

Installation size

·HP4VG 135 Port details

Port	Port Name	Standard	Oil Port Specification (thread depth)
A, B	Working port	SAE J518	1 1/4"
	Fastening thread	DIN 13	M14×2（depth 19）
S	Suction port	DIN 3852	M48×2（depth 22）
T1, T2	Drain port	DIN 3852	M33×2（depth 18）
R	Air bleed port	DIN 3852	M16×1.5（depth 12）
X1, X2	Control pressure port	DIN 3852	M16×1.5（depth 12）
G	Boost pressure port	DIN 3852	M22×1.5（depth 14）
P_S	Pilot pressure port inlet	DIN 3852	M18×1.5（depth 12）
MA, MB	Measuring port pressure A, B	DIN 3852	M12×1.5（depth 12）
MH	Measuring port, high pressure	DIN 3852	M12×1.5（depth 12）
Fa	Boost pressure port inlet	DIN 3852	M33×2（depth 18）
Fa1	Boost pressure port inlet (Filter can be installed)	DIN 3852	M33×2（depth 18）
Fe	Charge pressure outlet	DIN 3852	M33×2（depth 18）
Fs	From the filter to the oil suction line（at cold start)	DIN 3852	M33×2（depth 18）

Installation size

·HP4VG 135 Shaft extension type

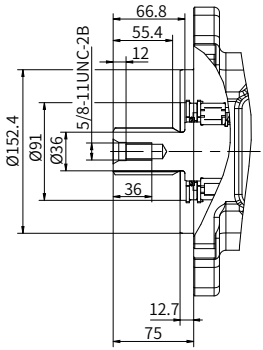

“S4” type spline shaft
ANSI B92.1a
1 3/4 in 13T 8/16 DP

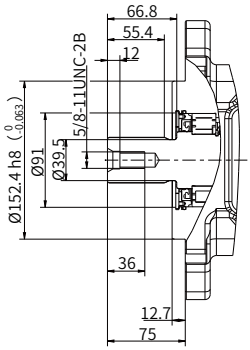

“S6” type spline shaft
ANSI B92.1a
27T 16/32 DP

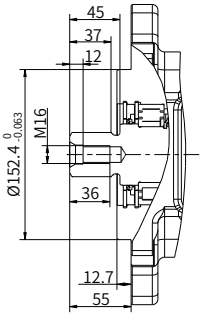

“T5” type spline shaft
DIN 5480
W40×2×18×9g

Installation size

·HP4VG 135 Through shaft drive

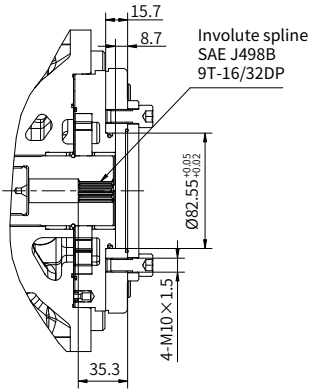

“A1” type through drive

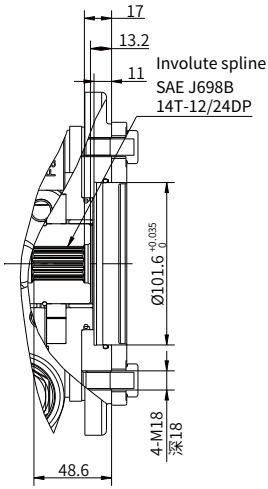

“B1” type through drive

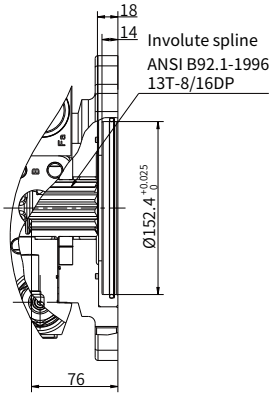

“D1” type through drive

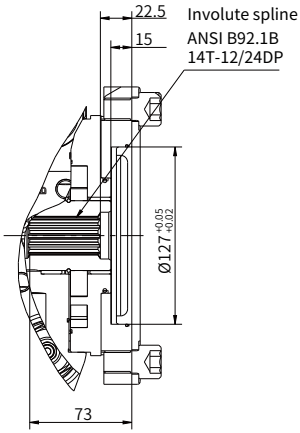

“E2” type through drive

HP4VG 145 Control principle

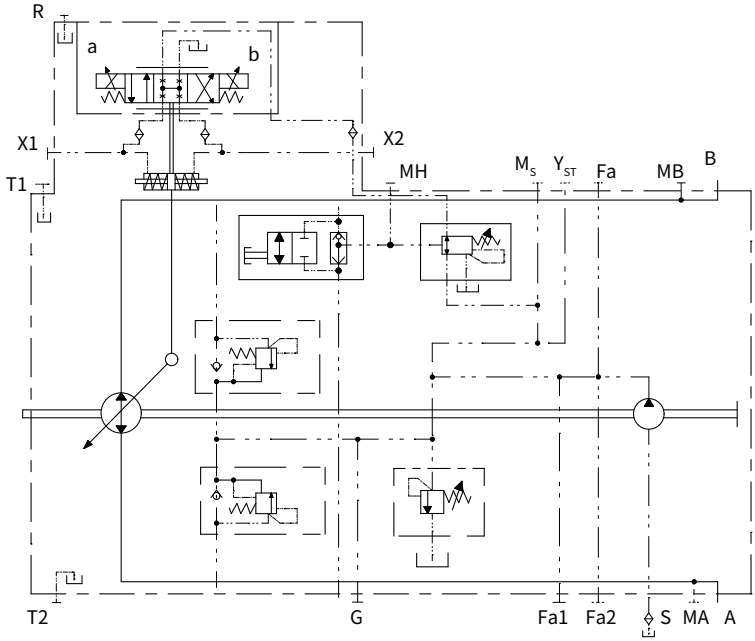

Direction of rotation	Clockwise		Counter-clockwise	
Actuation of proportional solenoid	a	b	a	b
Control pressure	X1	X2	X1	X2
Flow direction	B to A	A to B	A to B	B to A
Working pressure	MA	MB	MB	MA

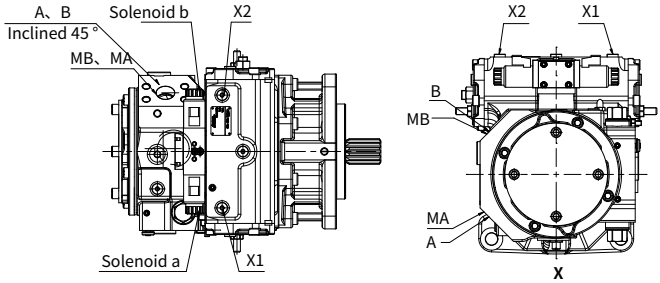

Installation size

HP4VG 145 Installation size

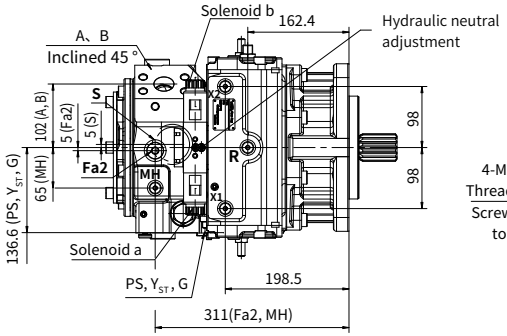

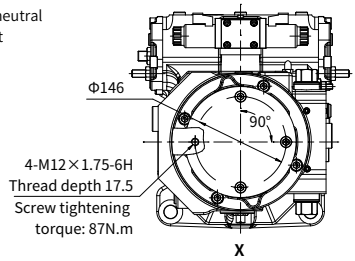

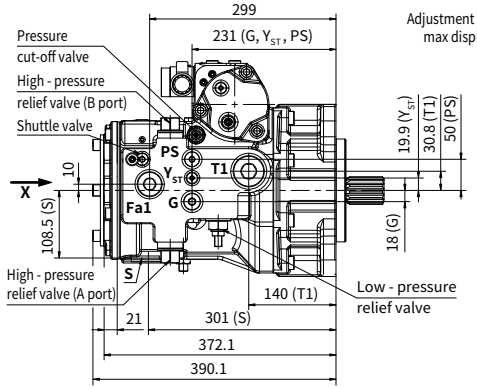

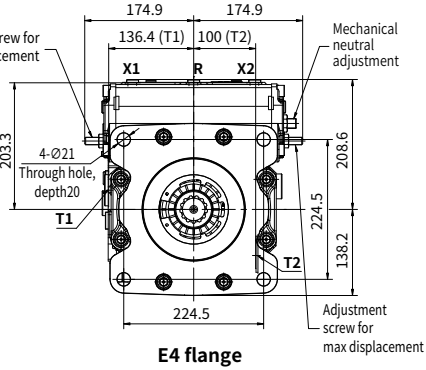

E4 flange

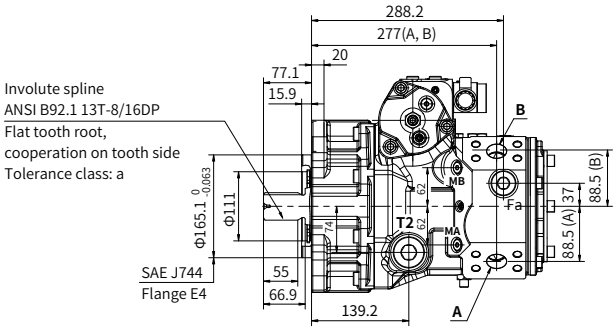

E4 flange

Installation size

HP4VG 145 Installation size

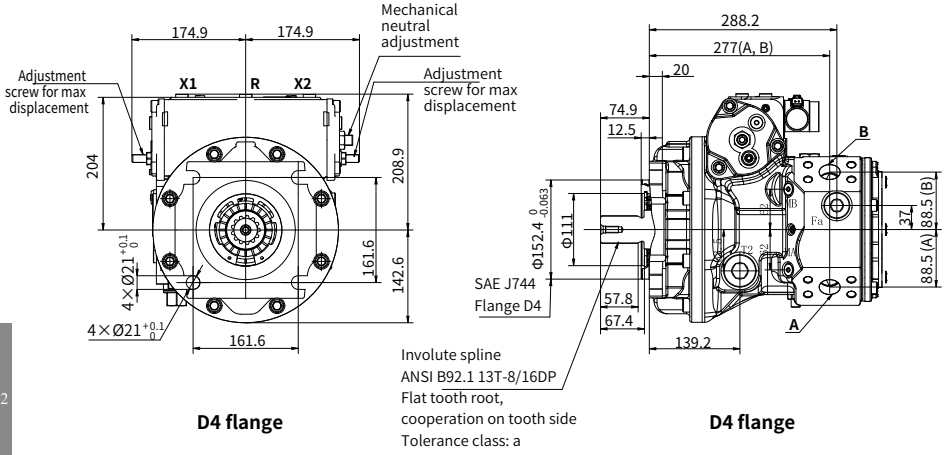

D4 flange

D4 flange

· HP4VG 145 Port details

Port	Port Name	Standard	Oil Port Specification (thread depth)
A, B	Working port	SAE J518	1 1/4in
	Fastening thread	DIN 13	M14×2（depth 19mm）
S	Suction port	ISO 9974-1	M48×2（depth 24mm）
T1, T2	Drain port	ISO 9974-1	M42×2（depth 20mm）
R	Air bleed port	ISO 9974-1	M14×1.5（depth 14.1mm）
X1, X2	Control pressure port	ISO 9974-1	M14×1.5（depth 20mm）
G	Boost pressure port	ISO 9974-1	M22×1.5（depth 19mm）
P_S	Pilot pressure port inlet	ISO 9974-1	M18×1.5（depth 17mm）
Y_{ST}	Pilot pressure port outlet	ISO 9974-1	M14×1.5（depth 17.5mm）
MA, MB	Measuring port pressure A, B	ISO 9974-1	M14×1.5（depth 15.5mm）
MH	Measuring port, high pressure	ISO 9974-1	M14×1.5（depth 15mm）
Fa	Boost pressure port	ISO 9974-1	M33×2（depth 21mm）
Fa1	Boost pressure port	ISO 9974-1	M33×2（depth 15mm）
Fa2	Boost pressure port	ISO 9974-1	M22×1.5（depth 18.5mm）

Installation size

·HP4VG145 Shaft extension type

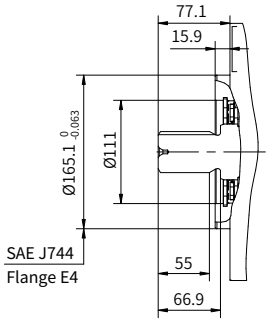

"S4" type spline shaft

ANSI B92.1a

13T-8/16 DP

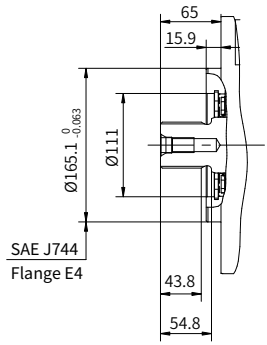

“T4” type spline shaft

DIN 5480

W50×2×24×9g

02

Installation size

·HP4VG145 Through shaft drive

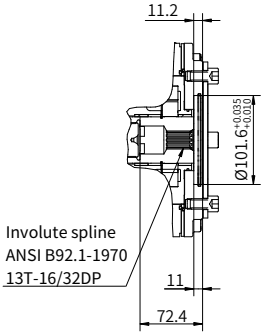

“B1” type through drive

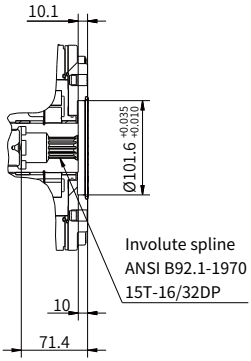

“B2” type through drive

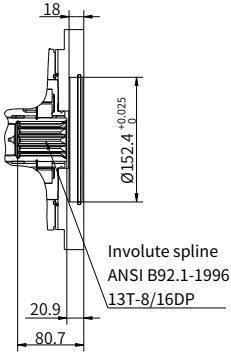

“D1” type through drive

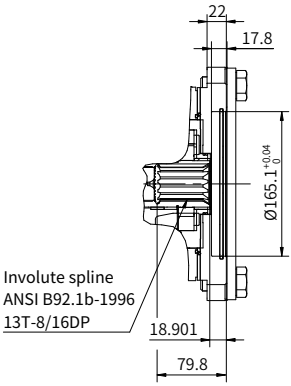

“E1” type through drive

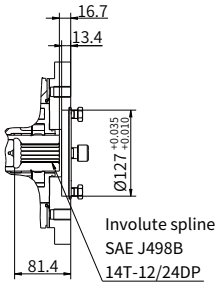

“E2” type through drive

HP4VG 175 Control principle

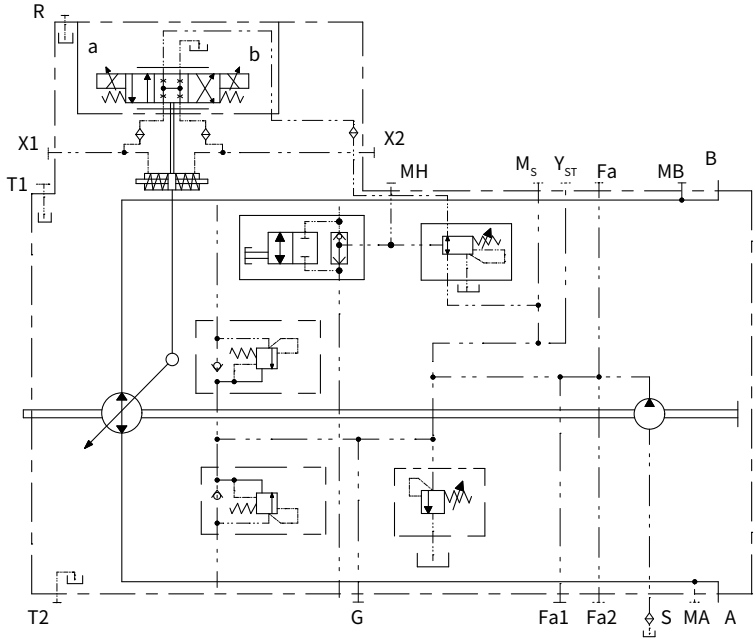

Direction of rotation	Clockwise		Counter-clockwise	
Actuation of proportional solenoid	a	b	a	b
Control pressure	X1	X2	X1	X2
Flow direction	B to A	A to B	A to B	B to A
Working pressure	MA	MB	MB	MA

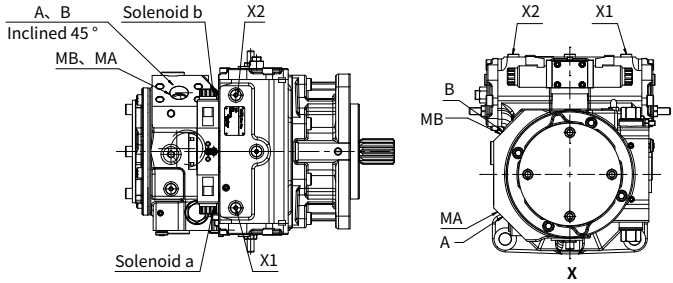

Installation size

HP4VG 175 Installation size

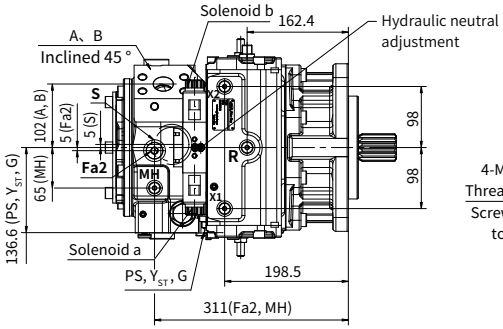

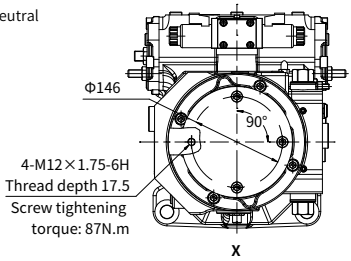

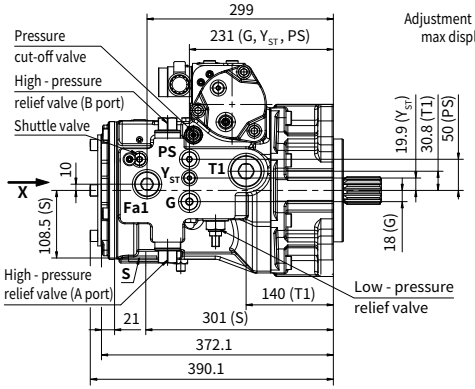

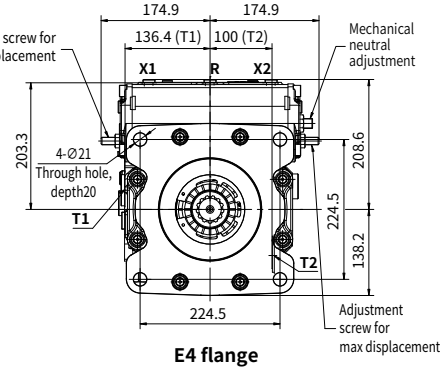

E4 flange

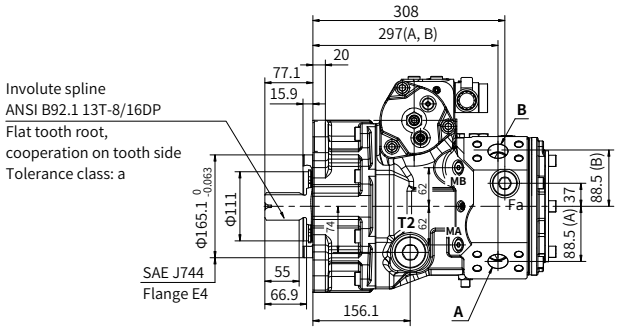

E4 flange

Installation size

HP4VG 175 Installation size

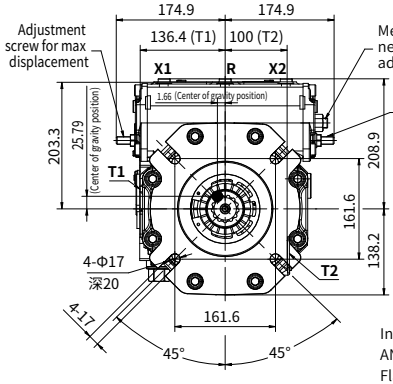

D4 flange

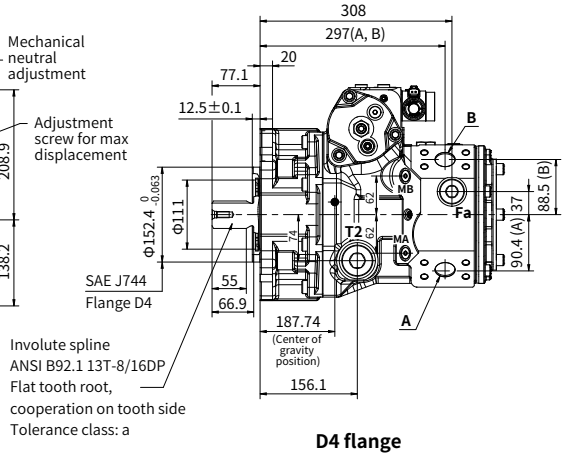

D4 flange

· HP4VG 175 Port details

Port	Port Name	Standard	Oil Port Specification (thread depth)
A, B	Working port	SAE J518	1 1/4in
	Fastening thread	DIN 13	M14×2（depth 19mm）
S	Suction port	ISO 9974-1	M48×2（depth 24mm）
T1, T2	Drain port	ISO 9974-1	M42×2（depth 20mm）
R	Air bleed port	ISO 9974-1	M14×1.5（depth 14.1mm）
X1, X2	Control pressure port	ISO 9974-1	M14×1.5（depth 20mm）
G	Boost pressure port	ISO 9974-1	M22×1.5（depth 19mm）
P_S	Pilot pressure port inlet	ISO 9974-1	M18×1.5（depth 17mm）
Y_{ST}	Pilot pressure port outlet	ISO 9974-1	M14×1.5（depth 17.5mm）
MA, MB	Measuring port pressure A, B	ISO 9974-1	M14×1.5（depth 15.5mm）
MH	Measuring port, high pressure	ISO 9974-1	M14×1.5（depth 15mm）
Fa	Boost pressure port	ISO 9974-1	M33×2（depth 21mm）
Fa1	Boost pressure port	ISO 9974-1	M33×2（depth 15mm）
Fa2	Boost pressure port	ISO 9974-1	M22×1.5（depth 18.5mm）

Installation size

·HP4VG175 Shaft extension type

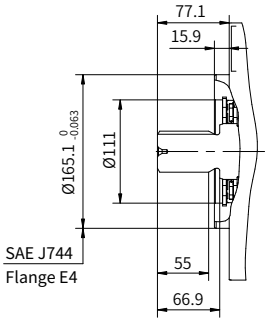

"S4" type spline shaft
ANSI B92.1a
13T-8/16 DP

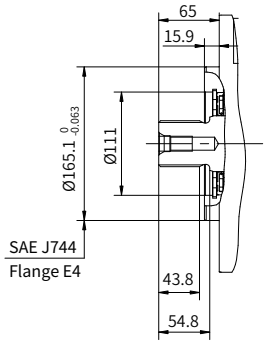

“T4” type spline shaft
DIN 5480
W50×2×24×9g

Installation size

·HP4VG175 Through shaft drive

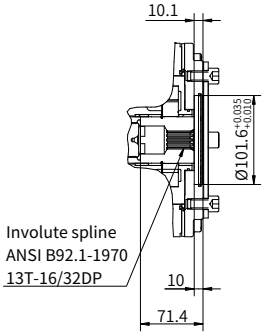

“B1” type through drive

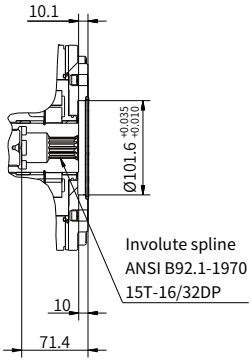

“B2” type through drive

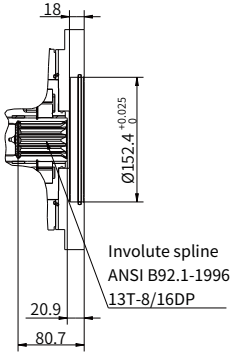

“D1” type through drive

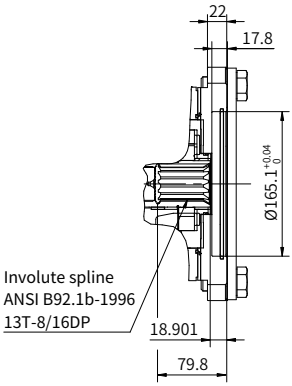

“E1” type through drive

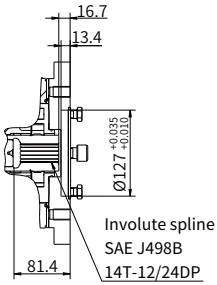

“E2” type through drive

HP4VG 280 Control principle

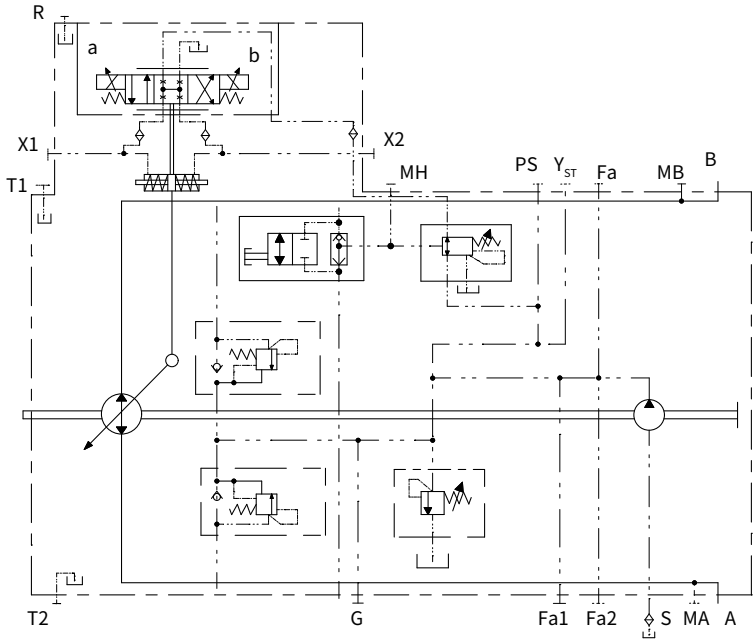

Direction of rotation	Clockwise		Counter-clockwise	
Actuation of proportional solenoid	a	b	a	b
Control pressure	X1	X2	X1	X2
Flow direction	B to A	A to B	A to B	B to A
Working pressure	MA	MB	MB	MA

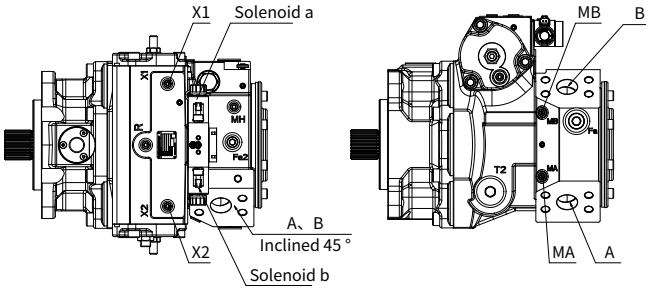

Installation size

HP4VG 280 Installation size

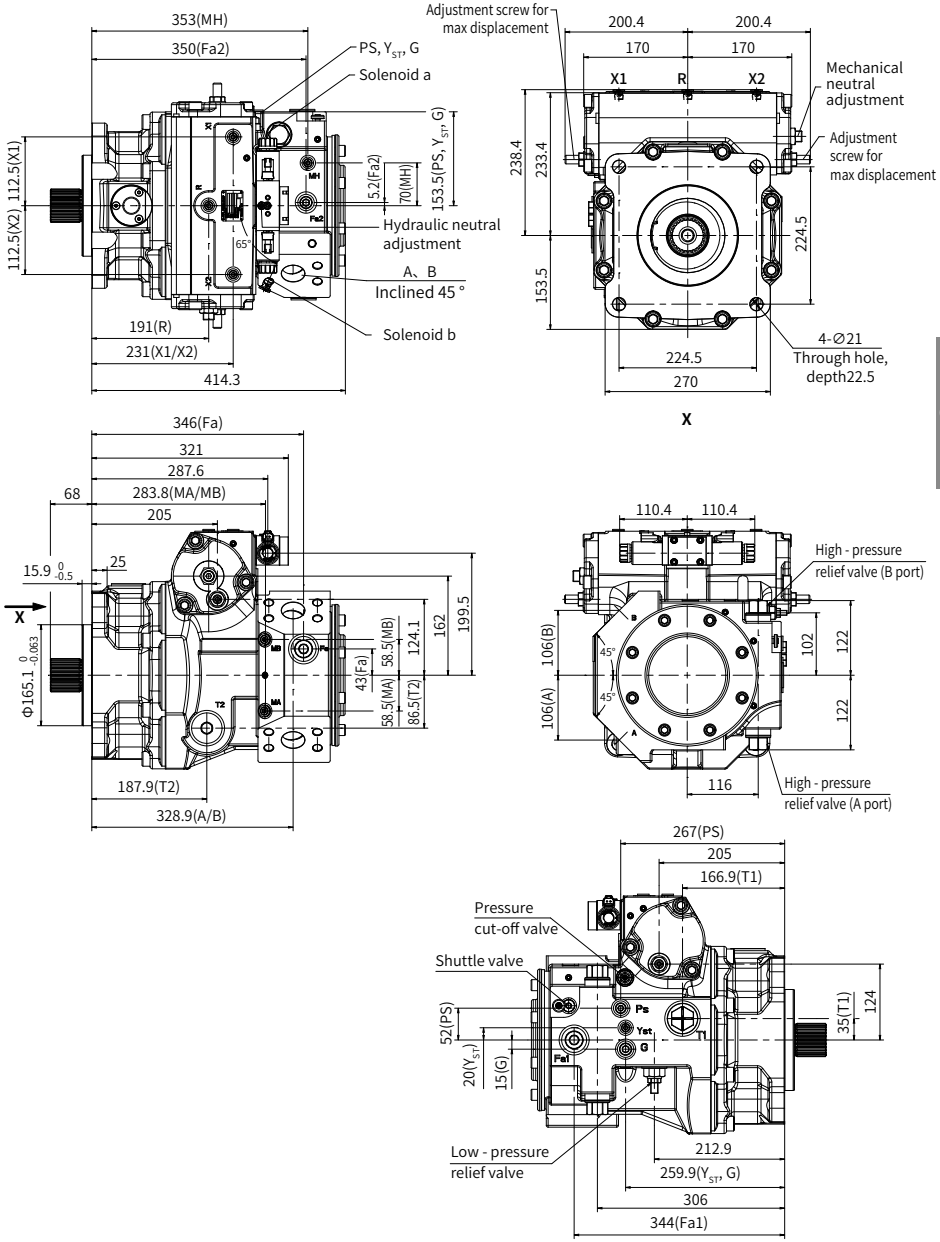

· HP4VG 280 Port details

Port	Port Name	Standard	Oil Port Specification (thread depth)
A, B	Working port	SAE J518	1 1/2"
	Fastening thread	DIN 13	M16×2 (depth 21)
S	Suction port	SAE J518	1 1/2"
	Fastening thread	DIN 13	M12×1.75 (depth 20)
T1, T2	Drain port	ISO 6149	M42×2 (depth 19.5)
R	Air bleed port	ISO 6149	M14×1.5 (depth 11.5)
X1, X2	Control pressure port	ISO 6149	M14×1.5 (depth 11.5)
G	Boost pressure port	ISO 6149	M22×1.5 (depth 15.5)
P_S	Pilot pressure port inlet	ISO 6149	M18×1.5 (depth 14.5)
Y_{ST}	Pilot pressure port outlet	ISO 6149	M14×1.5 (depth 11.5)
MA, MB	Measuring port pressure A, B	ISO 6149	M14×1.5 (depth 11.5)
MH	Measuring port, high pressure	ISO 6149	M14×1.5 (depth 11.5)
Fa	Boost pressure port	ISO 6149	M33×2 (depth 20)
Fa1	Boost pressure port	ISO 6149	M33×2 (depth 20)
Fa2	Boost pressure port	ISO 6149	M22×1.5 (depth 16.5)

Installation size

·HP4VG280 Shaft extension type

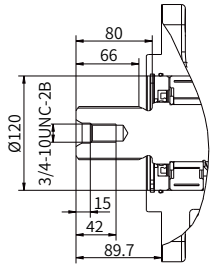

“S5” type spline shaft

ANSI B92.1-1996
17T-8/16DP

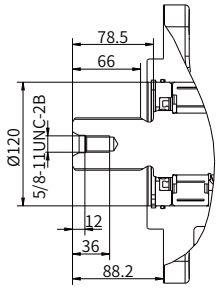

“S7” type spline shaft

ANSI B92.1-1996
15T-8/16DP

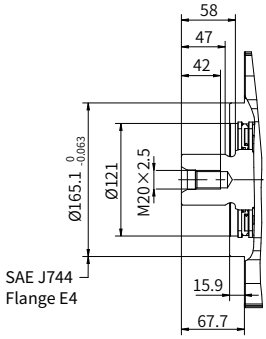

“T6” type spline shaft

DIN 5480
W55×2×26×9g

Installation size

·HP4VG280 Through shaft drive

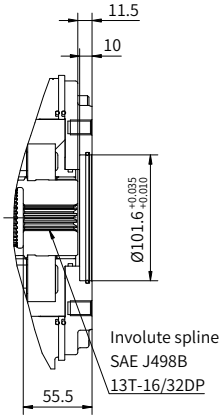

"B1" type through drive

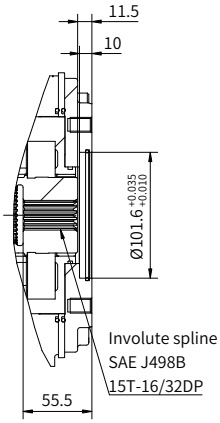

"B2" type through drive

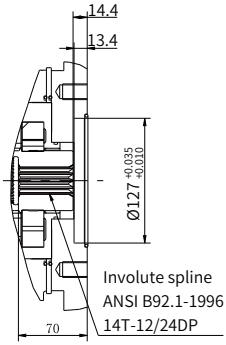

"C2" type through drive

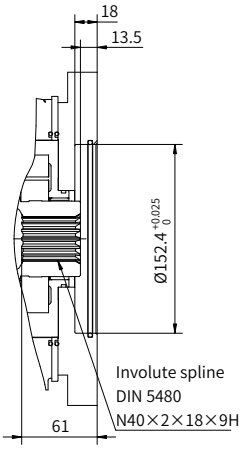

"D2" type through drive

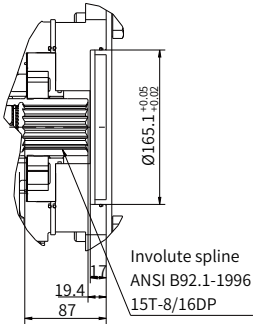

"E3" type through drive

China
+86 400 101 8889

America
+01 630 995 3674

Germany
+49（30）72088-0

Japan
+81 03 6809 1696