HP3V SERIES

Swash-plate Type
Axial Piston Variable Displacement Pump

Hengli swash-plate axial piston pump HP3V, the key parts of the pump are made of imported materials, quality strictly controlled, suitable for high-pressure hydraulic applications.

Apply to open hydraulic circuit

Displacements (cc/rev):	80	140
Rated pressure (bar):	320	350
Peaking pressure (bar):	350	400

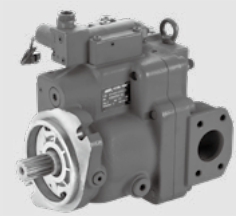

Contents

Technical Data	02
Type introduction	03-05
Regulators introduction	06-11
Performance curves	
· HP3V 80 Performance curves	12
· HP3V 140 Performance curves	13
Installation size	
· HP3V 80 Installation size	14-16
· HP3V 140 Installation size	17-23
· ※Priority selection of spline shaft or straight shaft	23
· Through Drive Installation Options	24-29
· Size of Tandem pumps	30
Setting of regulator and Max. displacement	31

Features

- Variable pump in swash-plate design for open circuit.
- High continuous pressure.
- Exceptional self-priming capability.
- Available with American (SAE) and Japanese (JIS) mounting flanges and shafts.
- Excellent reliability and long life.
- High power to weight ratio.
- Variety of control options.
- Optional through drive.
- Quick control response.
- Low pressure pulsation and low noise.
- Developed for engineering, mobile vehicles, Industrial and other industrial application.

Technical Data

Size		HP3V 80	HP3V 140
Displacement (cc/rev)		80	140
Pressure	Rated pressure (bar)	320	350
	Peak pressure (bar)	350	400
Rotation speed	Max for self-priming[*1] (rpm)	2400	2150
	Max[*2] (rpm)	3000	2500
Weight (Kg)		38.5	65
Quantity of oil to fill pump case (L)		0.8	1.4
Input torque rating (Nm)		400	980
Temperature Range (°C)		-20~95	
Viscosity Range (mm^2/s)		10-1000[*3] (The best use of viscosity range 16~36 mm^2/s)	

1 Steady state suction pressure should be 0 bar and above(at normal condition);

2 If suction pressure less than 0 bar, Boost pressure should be required;

3 In case of 200-1000mm^2/s, please allow system to warm up before using machine.

Type introduction

HP3V	80	/	A	V	1	O	R	B2	S1	M	—	L1/1	—	D	2	—	T
①	②		③	④	⑤	⑥	⑦	⑧	⑨	⑩		⑪		⑫	⑬		⑭

Product series

①	Product series	HP3V

Displacement

②	Displacement cc/rev	80	140

Design series

③	Design series	A Series: HP3V 80-140	A

Seals

④	Seals	FKM (Viton rubber: DIN ISO 1629)	V
		NBR (Nitrile rubble: DIN ISO 1629)	N

Hydraulic circuit

⑤	Hydraulic circuit	Open circuit	1

Through Drive

			80	140	Code
⑥	Without through drive		●	●	O
	Standard configuration with gear pump 6 cc/rev		●		X1
	Standard configuration with gear pump 10 cc/rev		●	●	X2
	Mounting Flange	Spline shaft			
	SAE A 82-2	SAE J744-16-4 9T 16/32DP	●	●	A1
		SAE J744-19-4 11T 16/32DP	●	●	A2
	SAE B 101-2	SAE J744-22-4 13T 16/32DP	●	●	B1
		SAE J744-25-4 15T 16/32DP	●	●	B2
	SAE C 127-2	SAE J744-32-4 14T 12/24DP	●	●	C1
		SAE J744-38-4 17T 12/24DP		○	C2
	SAE C 127-4	SAE J744-32-4 14T 12/24DP		●	C3
		SAE J744-38-4 17T 12/24DP		○	C4
	SAE D 152-4	SAE J744-44-4 13T 8/16DP		●	D1
		DIN 5480 N50×2×24×9H		●	D2

Type introduction

Direction of Rotation

⑦	Viewed on drive shaft	Clockwise	R
		Counter-clockwise	L

Input Mounting flanges

	Mounting flanges size	80	140	Code
⑧	SAE C 127-2	●		C2
	SAE C 127-2/4 bolt (same flange)		●	C4
	SAE D 152-4		●	D4
	ISO 3019/2-125, 2 bolt	○		I2
	ISO 3019/2-160, 4 bolt		○	I3
	ISO 3019/2-180, 4 bolt		●	I4
	ISO 3019/2-125, 2/4 bolt (same flange)		○	I5

Input Shaft

	Shaft size	80	140	Code
⑨	SAE J744-25-4 15T 16/32DP	●		S2
	SAE J744-32-4 14T 12/24DP	●	●	S3
	SAE J744-38-4 17T 12/24DP		●	S4
	SAE J744-44-4 13T 8/16DP		●	S5
	JIS D 2001 32×11×2.5	●		S6
	DIN 5480 W40×2×18×9g		○	D2
	DIN 5480 W45×2×21×9g		●	D3
	DIN 5480 W50×2×24×9g		●	D4
	SAE J744-32-1 B7.94×44 straight shaft	●	●	K3
	SAE J744-44-1 B11.11×63 straight shaft		●	K4
	DIN 6885 12×8×63 straight shaft		○	K7
	DIN 6885 14×9×75 straight shaft		●	K8

Thread type of Flange Fixing Port

⑩	Thread type	Metric threads	M
		UNC threads	S

Type introduction

Control type

	Control type		80	140	Code
⑪	Cover plate, apply to constant displacement pump		●	●	N
	Pressure cut-off	Only pressure control	●	●	DR
		+Load sensing with orifice R4	●	●	L0
		+Load sensing without orifice R4	●	●	L1
		Remotely operated+ Load sensing	●	●	P0
		+Electric proportional displacement		●	DR-EDO
	Power Control (*)	Pressure cut-off+ Load sensing	●	●	L1/1
		Remotely operated+ Pressure cut-off	●	●	P0/1
		Electrically (negative control) +Pressure cut-off+ Load sensing	●	●	L1/1-E0
		Hydraulic control + Pressure cut-off + Load sensing	●	●	L1/1-H0
		+Electric proportional displacement + Pressure cut-off		●	DR/1-EDO

Connector for solenoids

		80	140	Code
⑫	Without solenoid	●	●	Blank
	AMP Junior timer; 2 contact pin, (without suppressor diode)	●	●	A
	Deutsch DT04-2P ; 2 contact pin, (without suppressor diode)	●	●	D
	DIN EN175301-803 ; 3 contact pin, (without suppressor diode)		●	H

Input Voltage

⑬	Without solenoid	Blank
	12VDC	1
	24VDC	2

Application Conditions

		80	140	Code
⑭	Apply to excavator	●	●	T
	Other mobile machinery, construction machinery, industrial application	●	●	Blank

Remark: ● = available; ○ = On request;

Regulators introduction

01

Code: L0 (L1)

Control Type :

1. Load sensing
Standard setting:15bar
Adjustment range:10bar-21bar
2. Pressure Cut-off
Standard setting:320bar
Adjustment range:21bar-320bar
L1 option(difference from L0)
With the L1 option, the bleed off orifice(R4)is plugged, when this option is applied, there must be another bleed off orifice in the external valving to prevent trapped pressure.

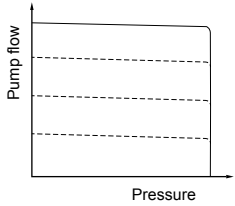

Function and Features:

Load sensing+ Pressure Cut-off
The load sensing control is a flow control option that operates as a function of the load pressure to regulate the pump displacement to match the actuator flow requirement.
The load sensing control compares pressure before and after the sensing orifice and maintains the pressure drop across the orifice (differential pressure Δp) and with it the pump flow constant.
If the differential pressure Δp increases, then the pump displacement decreases, and if the differential pressure Δp decreases, then the pump displacement increases until the pressure drop across the sensing orifice in the valve is restored.
Δp=Pp-Pa
Pump displacement is controlled to match the flow requirement as a function of the system differential pressure(load pressure vs delivery pressure).In addition, there is a pressure cut off function incorporated into the control.
The pressure cut off control keeps the pressure in a hydraulic system constant within its control range even under varying flow conditions. the variable pump only moves as much hydraulic fluid as is required by the actuators. if the operating pressure exceeds the set point set at the pressure control valve, the pump displacement is automatically swivelled back until the pressure deviation is corrected.

Hydraulic Circuit:

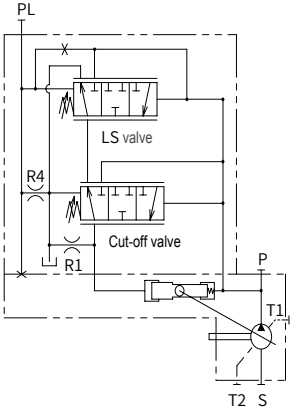

Regulators introduction

Code: P0

Control Type :

1. Load sensing
Standard setting: 15bar
Adjustment range: 10bar-21bar
2. Pressure Cut-off
Standard setting: 320bar
Adjustment range: 21bar-320bar

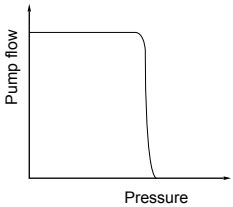

Function and Features:

P0 Pressure cut-off
The Pressure Cut-off regulator monitors outlet pressure once the pressure reaches the cut-off setting, the pump will return to minimum displacement.

Remote Control
The pump can be remotely controlled by connecting a relief valve to the PL port of the regulator. The pump can also be unload at a low pressure continue standby condition by using a solenoid valve.

Hydraulic Circuit:

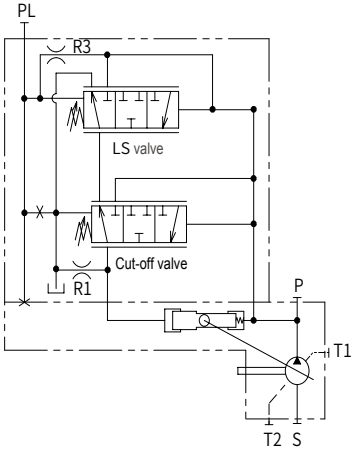

Regulators introduction

01

Code: ☐ /1

Control Type :

1. Load sensing
Standard setting: 15bar
Adjustment range: 10bar-21bar
2. Pressure Cut-off
Standard setting: 320 bar
Adjustment range: 21 bar-320 bar
3. Torque limiting

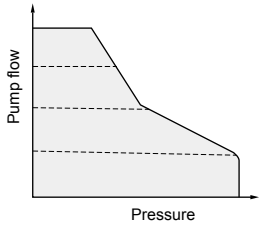

Function and Features:

_/1 Load Sense and Pressure Cut-off with Torque limiting
The L0/L1 control functions as previously noted. In response to a rise in delivery pressure the swash plate angle is decreased, restricting the input torque. This regulator prevents excessive load against the prime mover.
The torque limit control module is comprised of two springs that oppose the spool force by the system pressure. By turning an outer and inner spring adjustment screw, the appropriate input torque limit can be set.

Hydraulic Circuit:

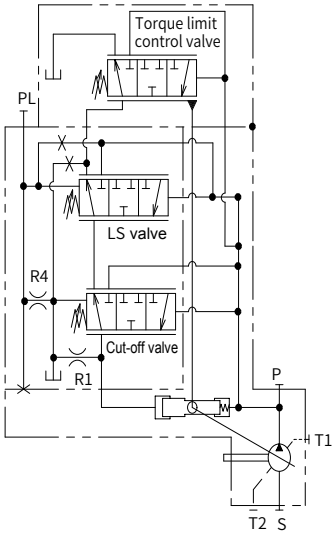

Regulators introduction

Code: ☐ /1-E0

Control Type :

1. Load sensing
Standard setting:15bar
Adjustment range:10bar-21bar
2. Pressure Cut-off
Standard setting: 320bar
Adjustment range: 21bar-320bar
3. Port Pr pressure: 20bar~45bar
4. Electromagnet characters

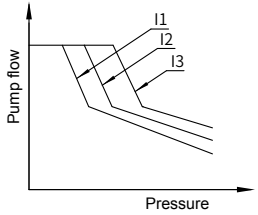

Voltage(V)	Current(A)	Resistence(Ω)	Insulation grade
12	0.89	7.3±10%(20°C)	H(180°C)
24	0.75	21.2±10%	UP to IP6K6/IPX9K

5. Connector (deutsch or Amp)
DEUTSCH: DT04-2P-E005
AMP: 174354-2 、 173706-1

Function and Features:

_/1-E0 Load Sense and Pressure Cut-off with Torque limiting
The L0/L1 control functions as previously noted. It controls the input torque of the pump by changing different current, specific current is related to certain input torque, thus satisfy needs of different torque on excavator

Hydraulic Circuit:

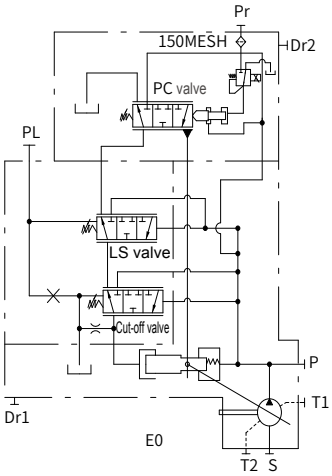

Regulators introduction

01

Code: ☐ **/1-H0**

Control Type :

1. Load sensing
Standard setting:15bar
Adjustment range:10bar-21bar
2. Pressure Cut-off
Standard setting: 320bar
Adjustment range: 21bar-320bar
3. Port Pr pressure: 0bar~39bar

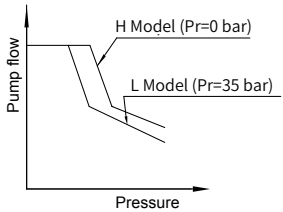

Function and Features:

_/1-H0 Load Sense and Pressure Cut-off with Total torque limiting
The L0/L1 control functions as previously noted.
It controls the input torque of the pump by changing different input pressure of port Pr, specific current is related to certain input torque, thus satisfy needs of different torque on excavator.

Hydraulic Circuit:

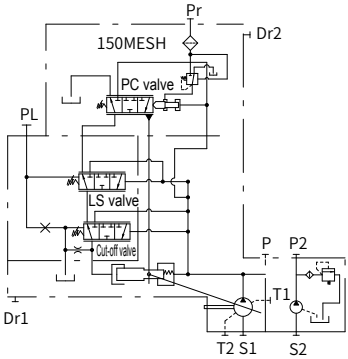

Regulators introduction

Code: ***-EDO**

Control Type :

The displacement of a variable displacement pump can be adjusted via an electro-hydraulic proportional adjustment. Control current range is ca. 300 mA to ca. 800 mA(24VDC) or ca.600mA to ca.1600mA(12VDC)

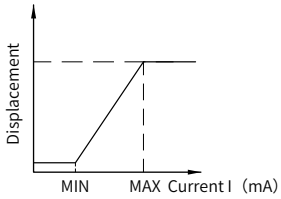

Function and Features:

Electric proportional displacement

The main pump is supplied with servo pressure via port St as soon as the servo pump is started. The solenoid is usually deenergized during start of operation, i.e. the valve piston is pushed against its stop by the metering spring. This opens a passage to the larger area of the piston which returns the swash plate to its idle position. There is always pressure apparent at the smaller side of the control piston.

When the solenoid is energized with 300 mA (24VDC-solenoid) or 600 mA (12VDC-solenoid) it will push the valve piston against the spring force thereby connecting the larger area of the control piston with the tank. The control piston will move the swash plate against the metering spring in direction of increased delivery flow and loading the metering spring. This movement will stop as soon as the forces of the metering spring and the proportional solenoid are balanced thereby closing the prop. valve.

Both total delivery flow and total stoke of the solenoid are achieved when the solenoid is energized with 800 mA (24VDC-solenoid) or 1600 mA (12VDC-solenoid).

Use electro-proportional displacement control valve and swash indicator can realize the close circuit control of the pump.

Hydraulic Circuit:

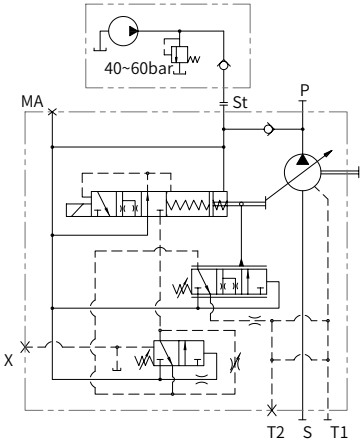

Performance curves

HP3V 80 Performance curves

01

Pump efficiency (%)

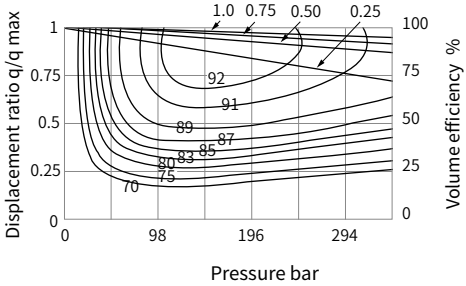

Self-priming Capability

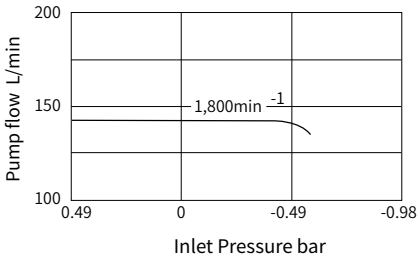

Bearing Life

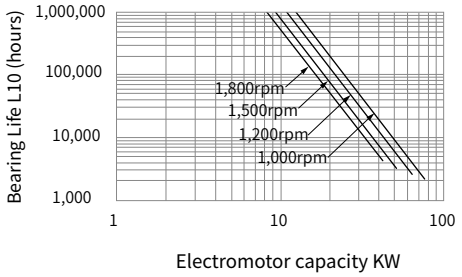

Noise Level

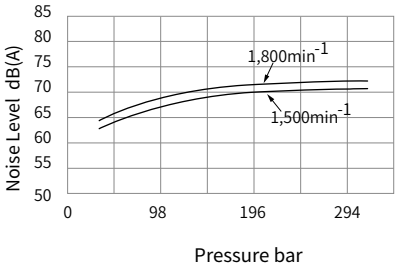

Performance curves

HP3V 140 Performance curves

Pump efficiency (%)

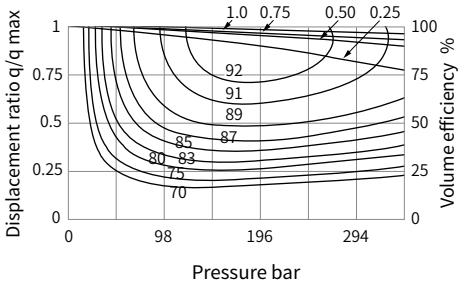

Self-priming Capability

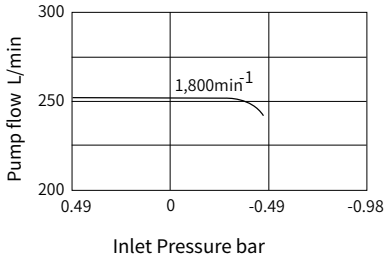

Bearing Life

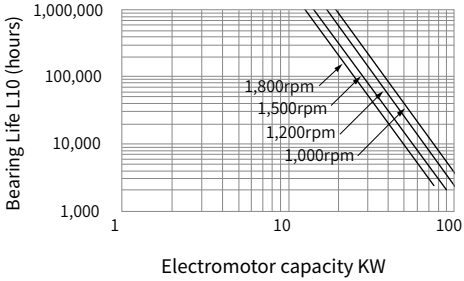

Noise Level

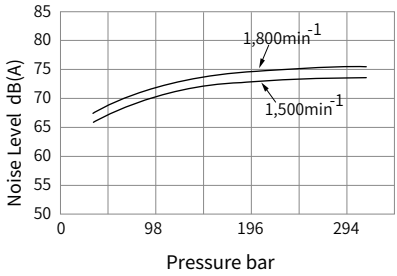

1.Values shown in above figures, excluding those for bearing life, are not guaranteed values, but mean level.Bearing life is basic rated life of calculation (reliability 90%);
2.Noise level of the pump is tested under silent circumstance (tested behind the pump about 1 meter);
3.Under actual working conditions, noise level of the pump may be higher than that in the curves.

Installation size

01

HP3V80 Installation size

HP3V80 With Cut-off/Load Sense Control with Torque limit (Clockwise Rotation)
For the CCW pump just reverse the inlet and outlet port.

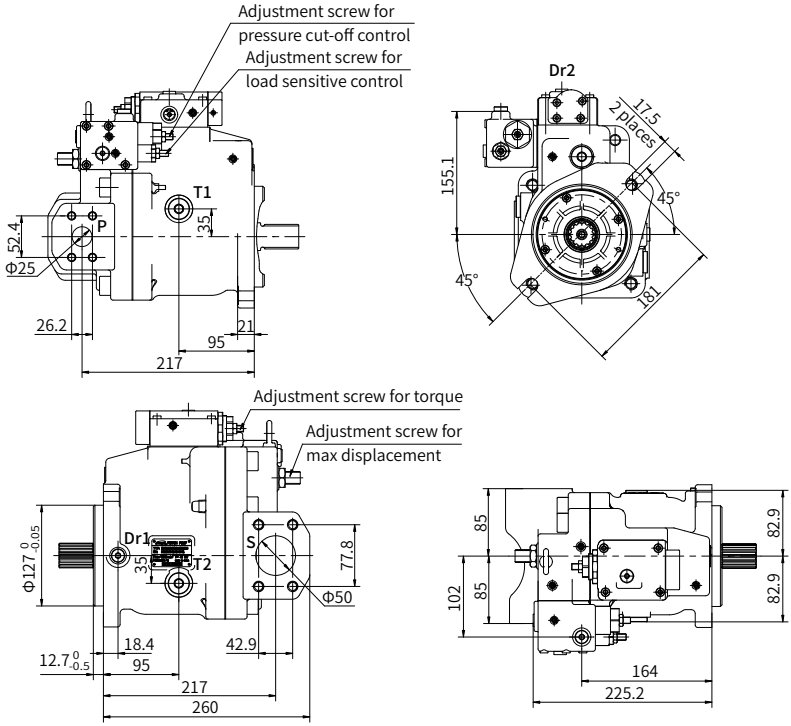

Port Details

	Port Name	Port Size and Description			Tightening Torque (N-m)
P	Working port	1" SAE J518C Code 61 (5000psi)	M (metric)	M10×1.5 (depth 17mm)	57
			S(UNC)	3/8-16UNC-2B (depth 17mm)	
S	Suction Port	2" SAE J518C Code 61 (3000psi)	M (metric)	M12×1.75 (depth 20mm)	98
			S(UNC)	1/2-13UNC-2B (depth 20mm)	
T1、T2	Case drain Port	SAE J1926/1 (3/4-16UNF-2B) (depth 16 mm)			98
PL	LS Control Port	SAE J1926/1 (7/16-20UNF-2B) (depth 11.5mm)			12
Dr1	Air Bleed Port	SAE J1926/1 (7/16-20UNF-2B) (depth 17mm)			12
Dr2	Air Bleed Port	M10×1 (depth 8.5mm)			12
Pr	Electronic control or Hydraulic control pilot	SAE J1926/1 (7/16-20UNF-2B) depth 11.5mm			12

Installation size

HP3V80 With Electro-Proportional Torque Controller/ Hydraulic Torque Controller

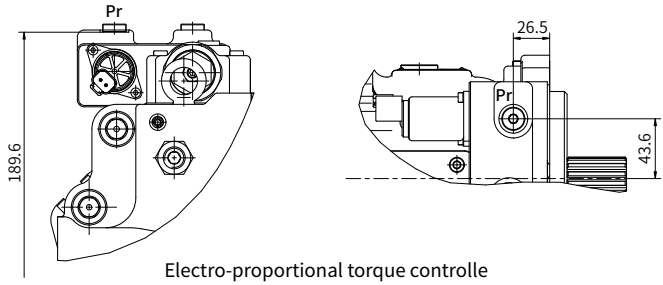

Electro-proportional torque controlle

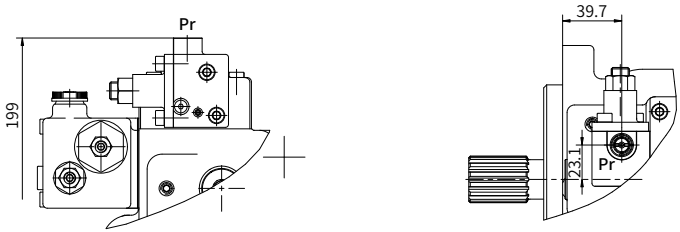

Hydraulic torque controller

HP3V80 Mounting Flange

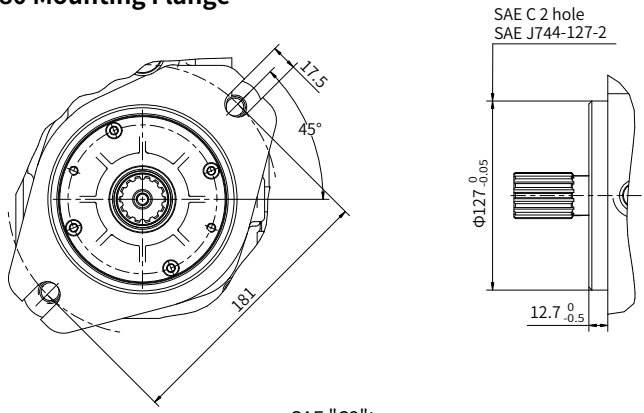

SAE "C2"type

Installation size

HP3V80 Input Shaft type

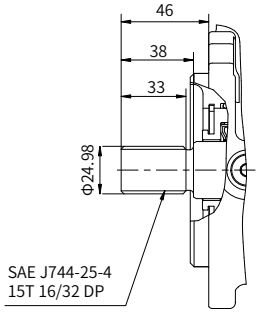

"S2" type spline shaft

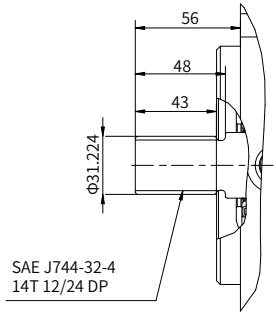

"S3" type spline shaft

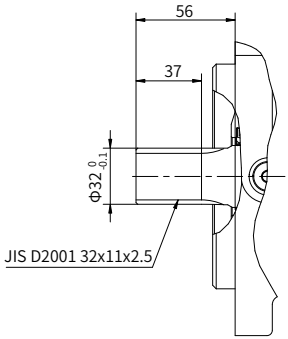

"S6"type spline shaft

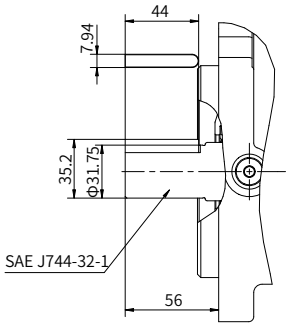

"K3" type straight shaft

Installation size

HP3V140 installation size

HP3V140 With Cut-off/Load Sense Control with Torque limit (Clockwise Rotation)
For the CCW pump just reverse the inlet and outlet port.

（D Flange）

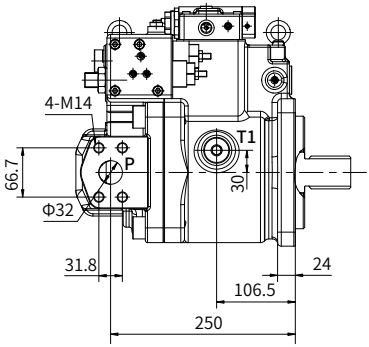

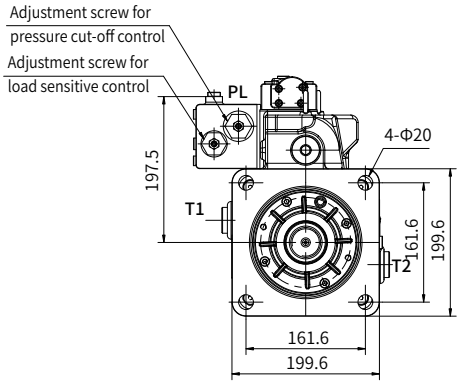

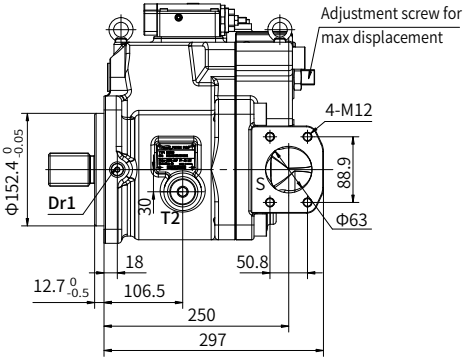

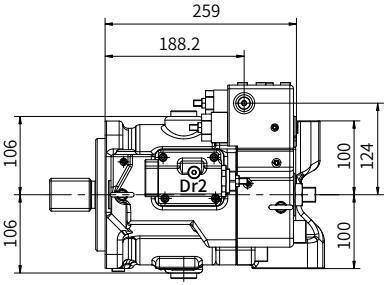

Installation size

01

HP3V140 installation size

HP3V140 With Cut-off/Load Sense Control with Torque limit (Clockwise Rotation)
For the CCW pump just reverse the inlet and outlet port.

（C Flange）

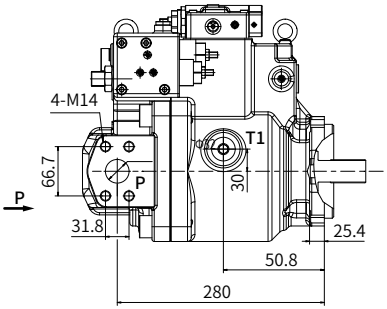

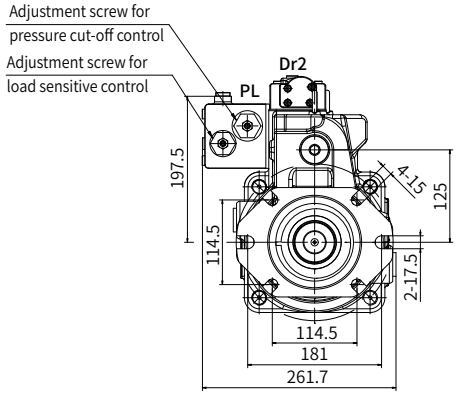

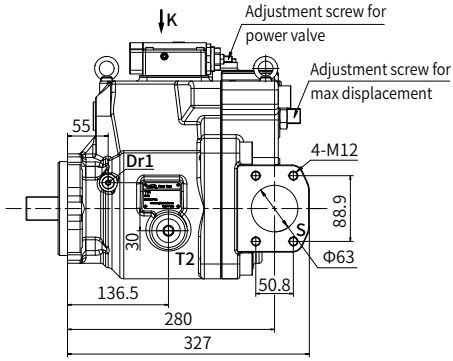

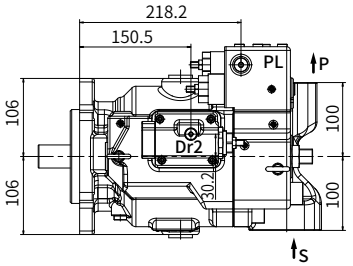

Port Details

	Port Name	Port Size and Description			Tightening Torque (N-m)
P	Working port	1-1/4" SAE J518C Code 62 (5000psi)	M (metric)	M14×2 (depth 19mm)	98
			S (UNC)	1/2-13UNC-2B (depth 19mm)	
S	Suction Port	2-1/2" SAE J518C Code 61 (2500psi)	M (metric)	M12×1.75 (depth 22mm)	98
			S (UNC)	1/2-13UNC-2B (depth 22mm)	
T1、T2	Case drain Port	SAE J1926/1 (1-1/16-12UNF-2B) (depth 23 mm)			167
PL	LS Control Port	SAE J1926/1 (7/16-20UNF-2B) (depth 17 mm)			12
Dr1	Air Bleed Port	SAE J1926/1 (7/16-20UNF-2B) (depth 14 mm)			12
Dr2	Air Bleed Port	M10×1 (depth 8.5mm)			12
Pr	Electronic control or Hydraulic control pilot	SAE J1926/1 (7/16-20UNF-2B) depth 11.5mm			12

Installation size

HP3V140 With Electrical Control for Torque limit

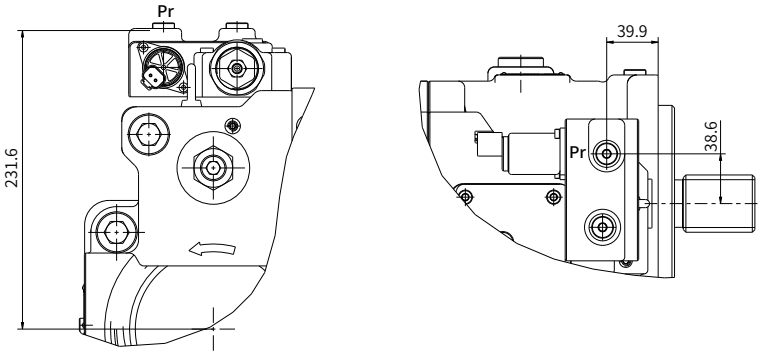

Installation size

01

HP3V140 Electric proportional displacement pump installation size

(Please refer to "Page 11/32" for hydraulic Circuit.)

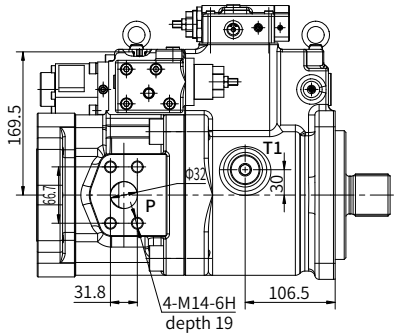

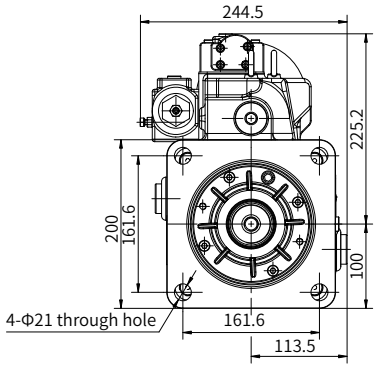

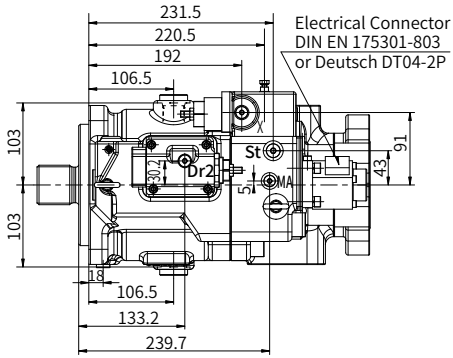

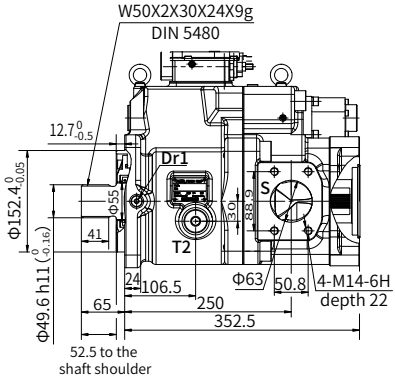

Port Details

	Port Name	Port Size and Description		Tightening Torque (N-m)
P	Delivery port	1-1/4" SAE J518C Code 62 (5000psi)	M14×2 (depth 19mm)	98
S	Suction Port	2-1/2" SAE J518C Code 61 (2500psi)	M12×1.75 (depth 22mm)	98
T1、T2	Drain port	DIN 3852 M26×1.5 (depth 16mm)		120
St	Pilot port	DIN 3852 M14×1.5 (depth 12mm)		35
Dr1	Air Bleed Port	SAE J1926/1 (7/16-20UNF-2B)		12
Dr2	Air Bleed Port	M10×1 (depth 8.5mm) ISO6149-1		12
MA	pressure port	DIN 3852 M12×1.5 (depth 12mm)		25

Installation size

HP3V140 Mounting Flange

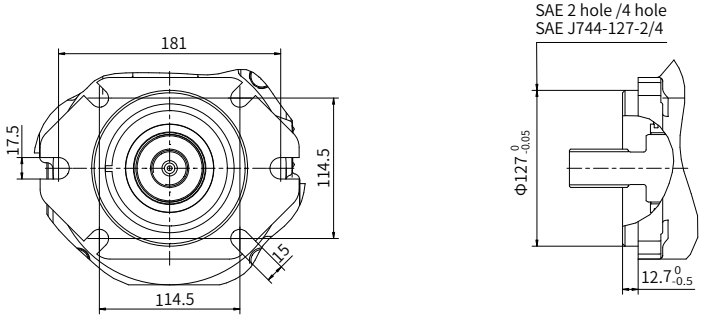

SAE "C4" type 127-2/4

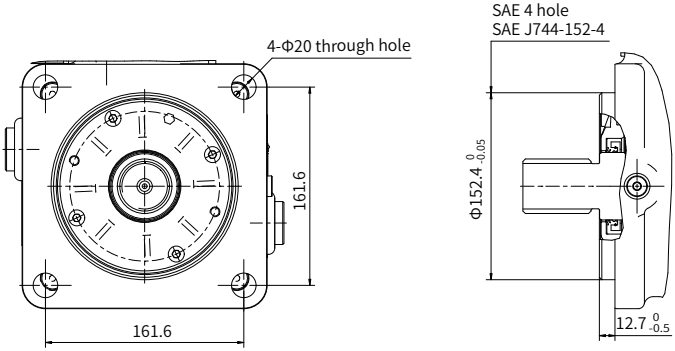

SAE "D4"type 152-4

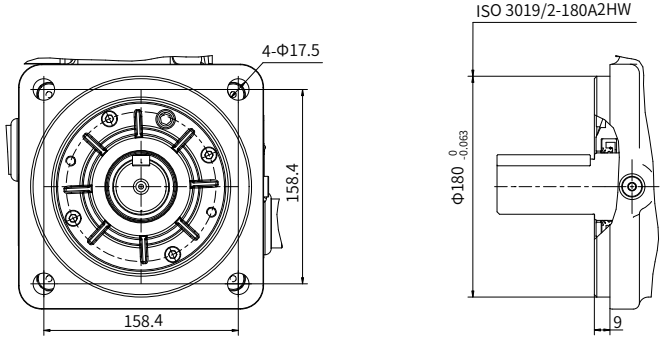

ISO "I4"type

Installation size

HP3V140 Input Shaft type

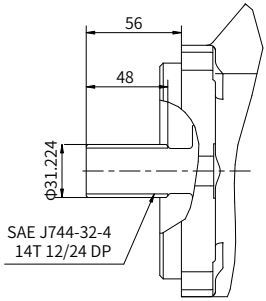

"S3" type spline shaft

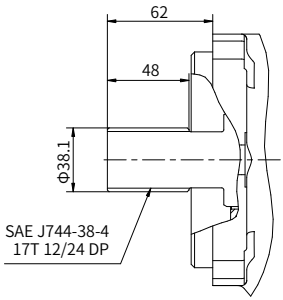

"S4" type spline shaft

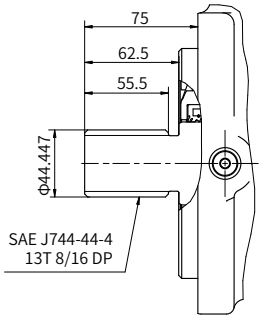

"S5" type spline shaft

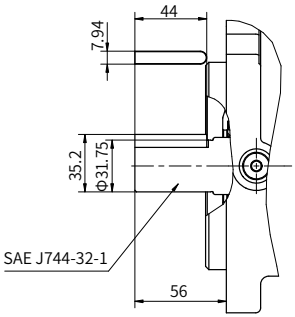

"K3" type straight shaft

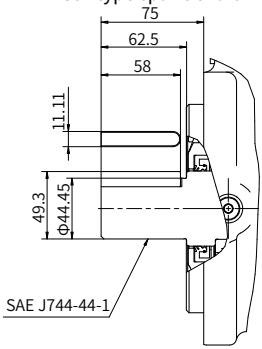

"K4" type straight shaft

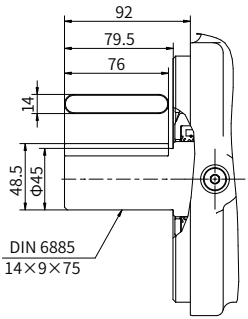

"K8" type straight shaft

Installation size

HP3V140 Input Shaft type

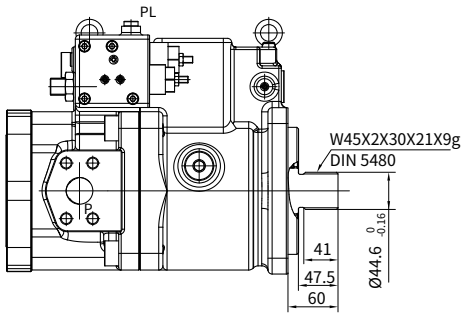

"D3" type spline shaft

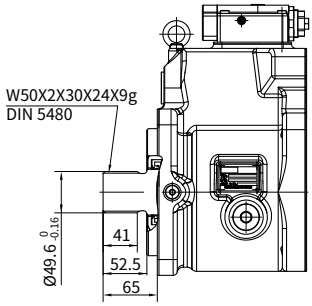

"D4" type spline shaft

※Priority selection of spline shaft or straight shaft

Shaft code	Size	80	140
S3	SAE J744-32-4 14T 12/24DP	●	
S5	SAE J744-44-4 13T 8/16DP		●
K3	SAE J744-32-1 B7.94×44 straight shaft	●	
K4	SAE J744-44-1 B11.11×63 straight shaft		●

Through Drive Installation Options

X Type

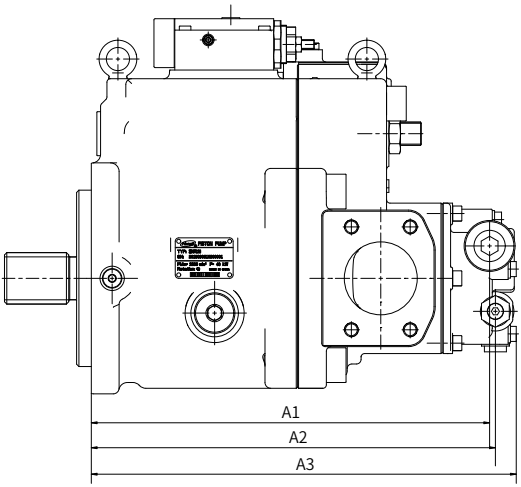

Gear pump information

	Rated pressure	Peak pressure	Theoretical displacement
6cc/rev	39bar	70bar	6cc/rev
10cc/rev	39bar	50bar	10cc/rev

	80	140
A1	305.5	344
A2	307.5	349
A3	325.5	367

Through Drive Installation Options

A1 Type

SAE A 82-2 + SAE J744-16-4 9T 16/32DP

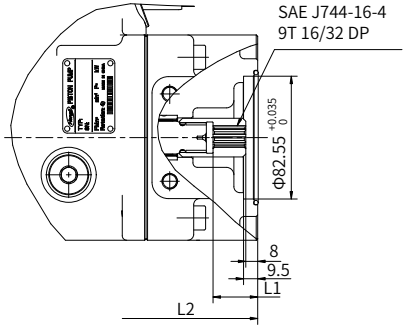

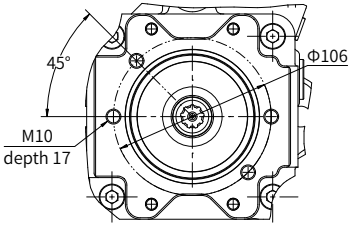

Disp.(cc/rev)	80	140 (flange C)	140 (flange D)
L1	33	31	31
L2	272	337.5	307.5

A2 Type

SAE A 82-2 + SAE J744-19-4 11T 16/32DP

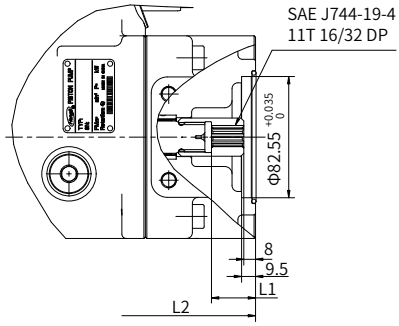

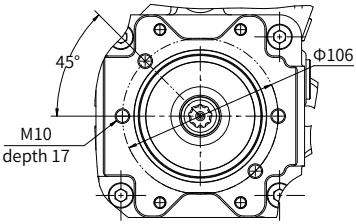

Disp.(cc/rev)	80	140 (flange C)	140 (flange D)
L1	33	31	31
L2	272	337.5	307.5

01

Through Drive Installation Options

B1 Type

SAE B 101 -2 + SAE J744-22-4 13T 16/32DP

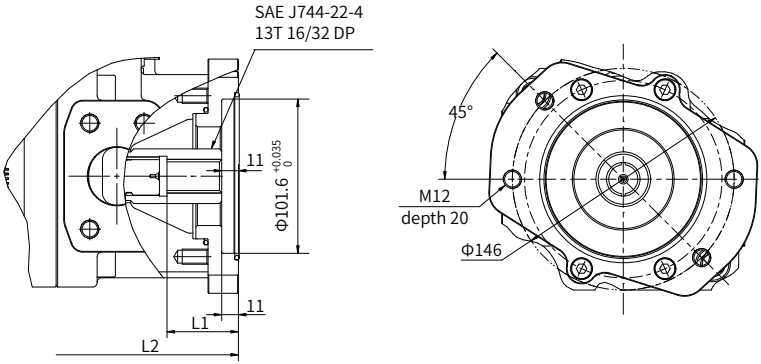

Disp.(cc/rev)	80	140 (flange C)	140 (flange D)
L1	47	49.5	49.5
L2	292	362.5	332.5

B2 Type

SAE B 101 -2 + SAE J744-25-4 15T 16/32DP

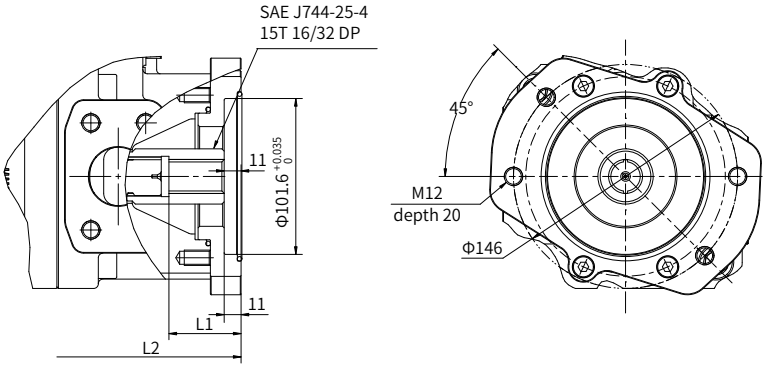

Disp.(cc/rev)	80	140 (flange C)	140 (flange D)
L1	47	49.5	49.5
L2	292	362.5	332.5

Through Drive Installation Options

C1 Type

SAE C 127-2 + SAE J744-32-4 14T 12/24DP

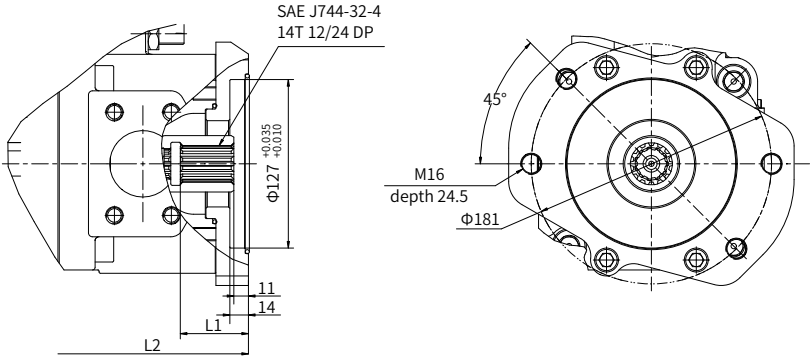

Disp.(cc/rev)	80	140 (flange C)	140 (flange D)
L1	53	56.5	56.5
L2	296.5	367.5	337.5

C2 Type

SAE C 127-2 + SAE J744-38-4 17T 12/24DP

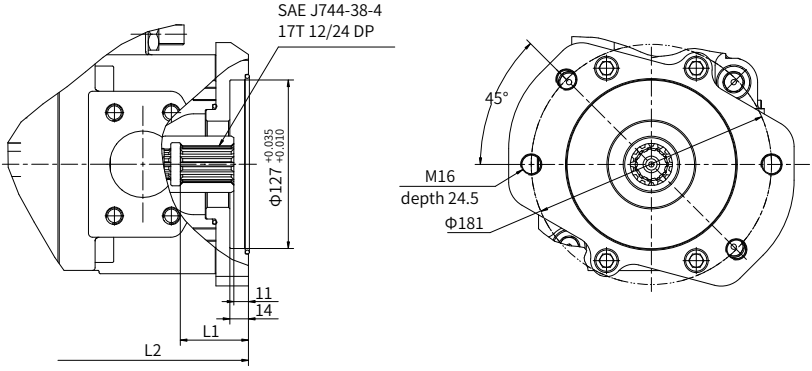

Disp.(cc/rev)	80	140 (flange C)	140 (flange D)
L1	—	62	62
L2	—	373	343

01

Through Drive Installation Options

C3 Type

SAE C 127-4+SAE J744-32-4 14T 12/24DP

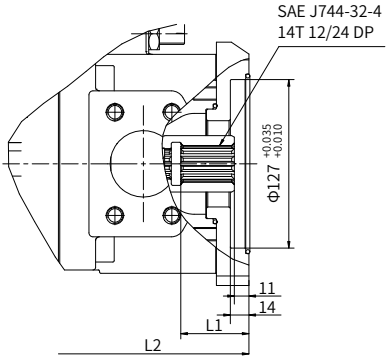

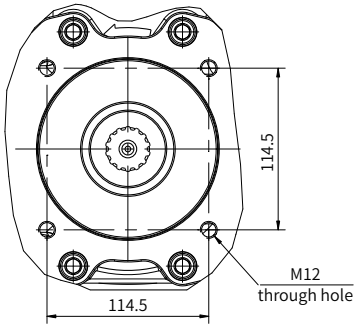

Disp.(cc/rev)	80	140 (flange C)	140 (flange D)
L1	—	56.5	56.5
L2	—	367.5	337.5

C4 Type

SAE C 127-4+SAE J744-38-4 17T 12/24DP

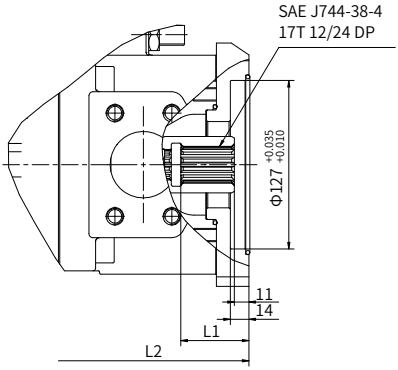

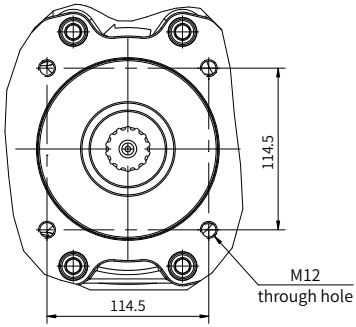

Disp.(cc/rev)	80	140 (flange C)	140 (flange D)
L1	—	62	62
L2	—	373	343

Through Drive Installation Options

D1 Type

SAE D 152-4 + SAE J744-44-4 13T 8/16DP

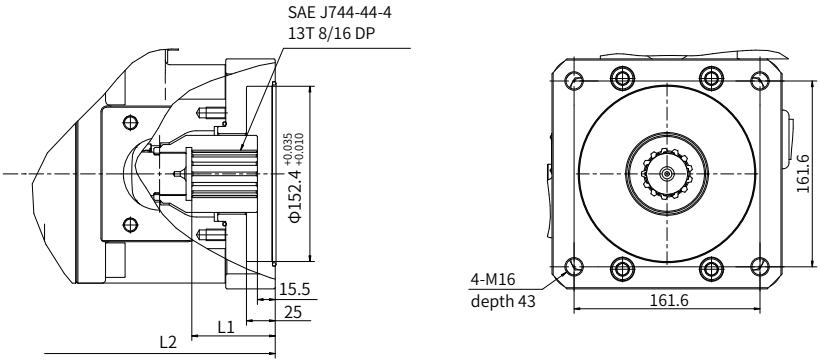

Disp.(cc/rev)	80	140 (flange C)	140 (flange D)
L1	—	72.5	72.5
L2	—	380.5	350.5

D2 Type

SAE D 152-4+DIN 5480 N50×2×24×9H

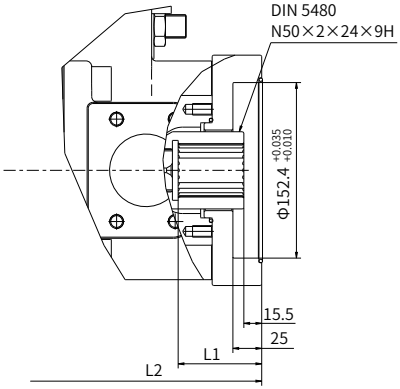

Disp.(cc/rev)	80	140 (flange C)	140 (flange D)
L1	—	72.5	72.5
L2	—	380.5	350.5

Size of Tandem pumps

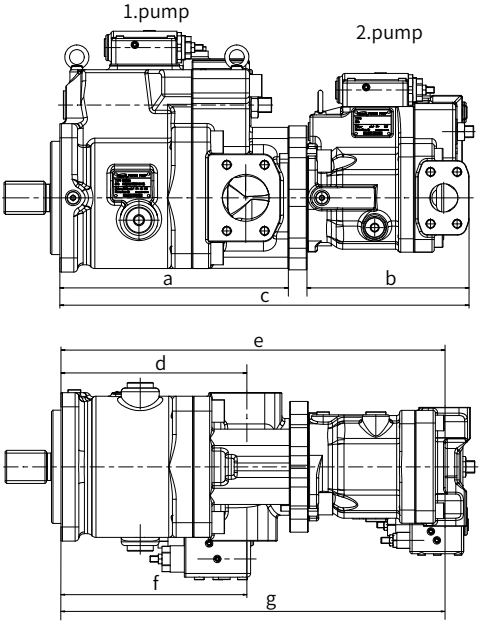

Size of Tandem pumps

1.pump / 2.pump	HP3V80						
	a	b	c	d	e	f	g
HP3V80	272	260	556.5	217	513.5	217	513.5
	HP3V140						
HP3V80	307.5	260	597.5	250	554.5	250	554.5
HP3V140	307.5	296	646.5	250	600.5	250	600.5

Setting of regulator and Max. displacement

Setting control valve

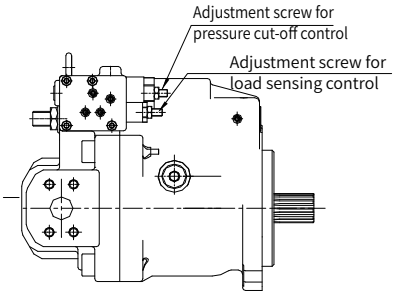

HP3V80-140 Pump

size	Approx. pressure change per rotate screw(bar)		Setting pressure at delivery: Pressure control : 320bar Differential pressure: 15bar
	Pressure cut-off valve	LS valve	
80	80	13	
140	92	14	

Setting of Max. displacement

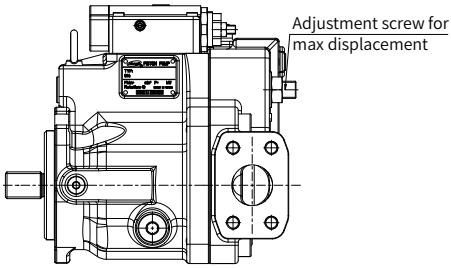

size	Approx. displacement change per revolution of screw (cc/rev)	Min. setting of max. displacement (cc/rev)	Setting displacement at delivery is maximum
80	6.0	35	
140	12	70	

China
+86 400 101 8889

America
+01 630 995 3674

Germany
+49 (30) 72088-0

Japan
+81 03 6809 1696

© This brochure can be reproduced, edited, reproduced or transmitted electronically without the authorization of Hengli Hydraulic Company. Due to the continuous development of the product, the information in this brochure is not specific to the specific conditions or applicability of the industry, thus, Hengli does not take any responsibility for any incomplete or inaccurate description.