HENGLI HYDRAULIC

Precise Control and High Efficiency
Bring You More Value

HVSP Series
Load Sensing Control Valve

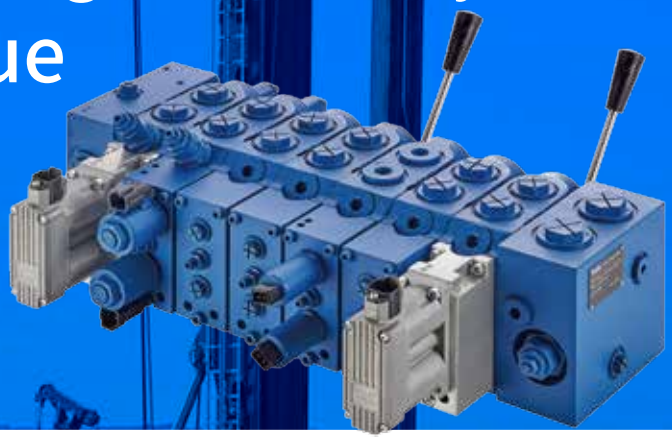

Quality - Reliable - Efficient

www.henglihydraulic.com

Precise Control and High Efficiency
Bring You More Value

HVSP Series Load Sensing Control Valve

The HVSP multi-way valve is a kind of load-sensing control valve developed for the mobile machinery application, the maximum flow of one plate can reach 200L/min.

The modular design concept allows flexible combination of plates with different control functions to meet all kinds of different customer requirements.

HVSP is a pre-compensated, load-sensing multi-way valve that can realize precise flow control independent of the load pressure; compared to the common directional valve, it is more energy-efficient and beneficial to improve system efficiency.

Features

- Load pressure independent flow distribution.
- Open center, for fixed displacement pump system.
- Closed center, for load sensing variable pump system.
- Postive or negative electric proportional LS pressure control.
- Extensive pilot control options including manual control, hydraulic control, electro-hydraulic on-off control, electro-hydraulic proportional control, CAN bus closed-loop control, etc.
- Load pressure compensated to enable the flow resistant to load fluctuations.
- Quick response.
- Low hysteresis.

Applications


Piling Machinery


Forestry Machinery


Concrete Machinery


Handling Machinery


Mining Machinery


Aerial Platform

Size	Rated Pressure	Rated Flow
15	350bar (Pump side) 420bar (Actuator side)	200 L/min-with load holding, without pressure compensator 190 L/min-withput load holding, with pressure compensator 150 L/min-with load holding, with pressure compensator

Hydraulic Diagram

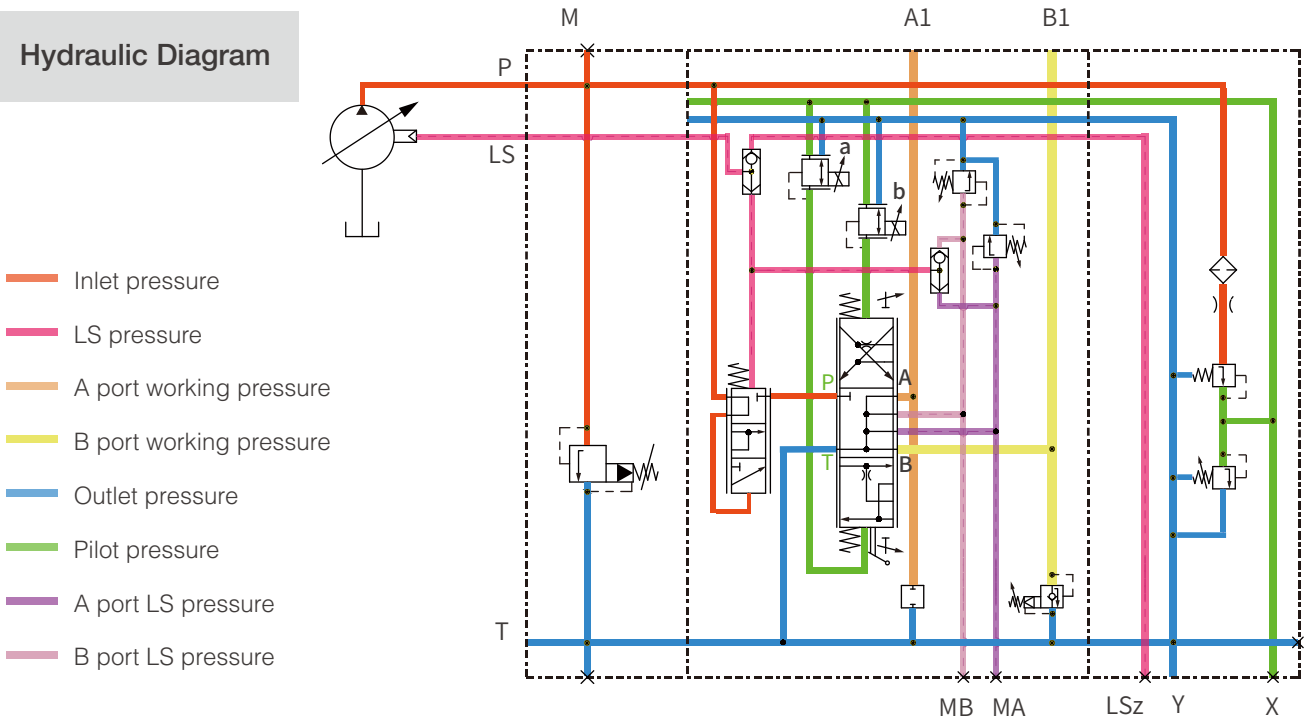

Pilot-controlled current (pressure) - flow curve

The symmetric spool with different flow rates, whose flow and pilot-controlled current (pressure) - flow curve as shown in the graphic, can realize a good linearity and precise control.

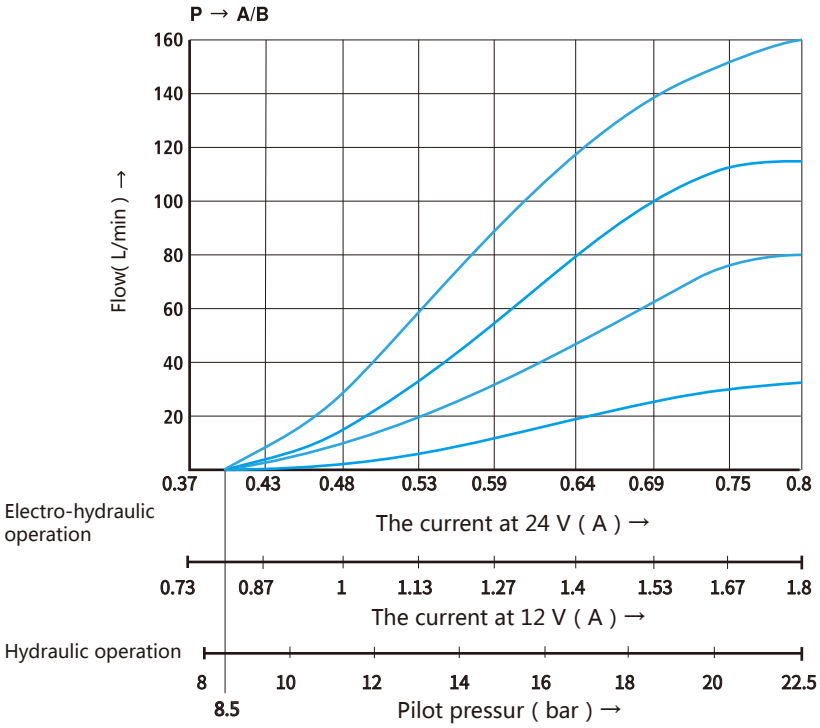

Cutaway view

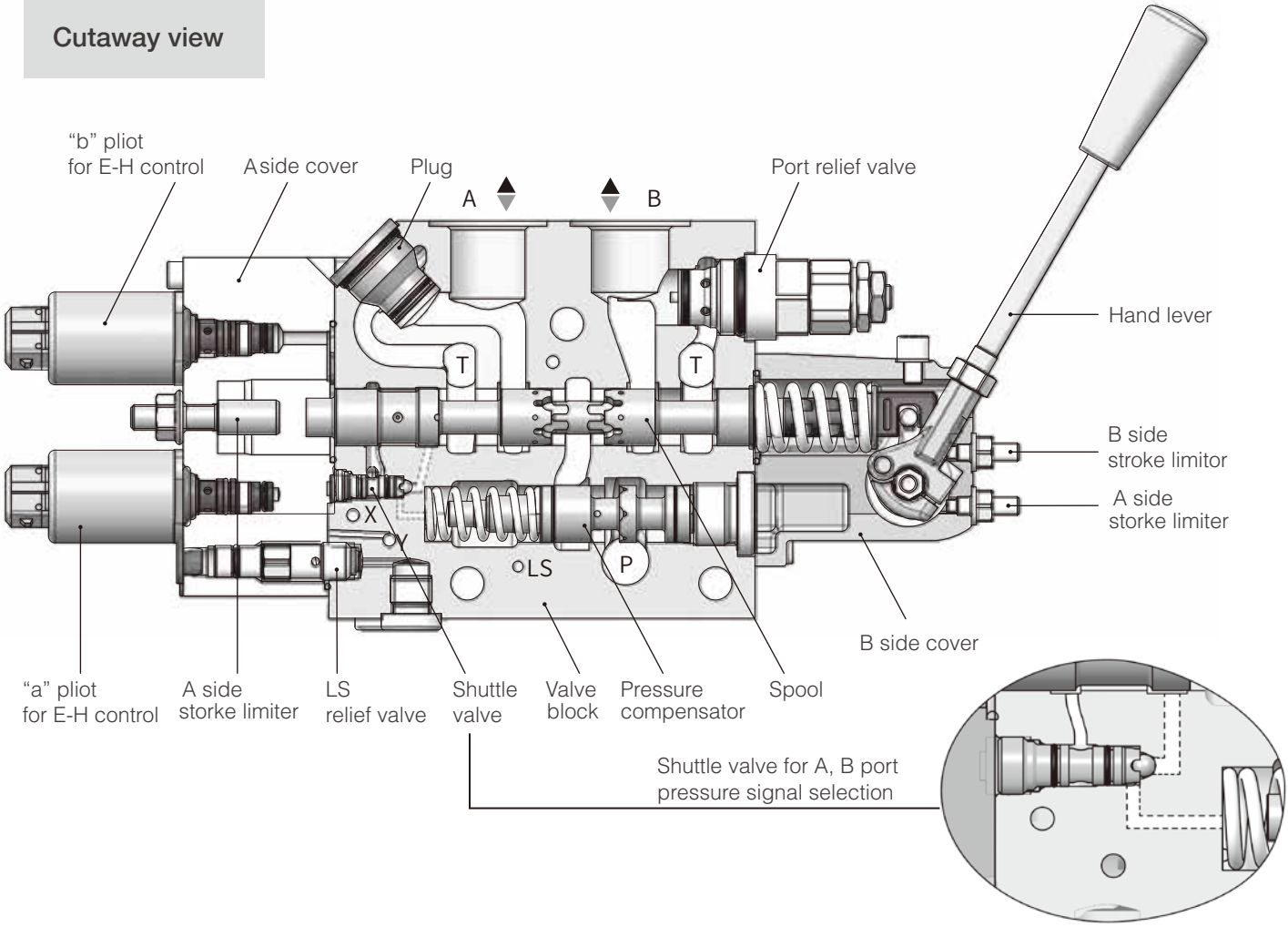

Decomposed View

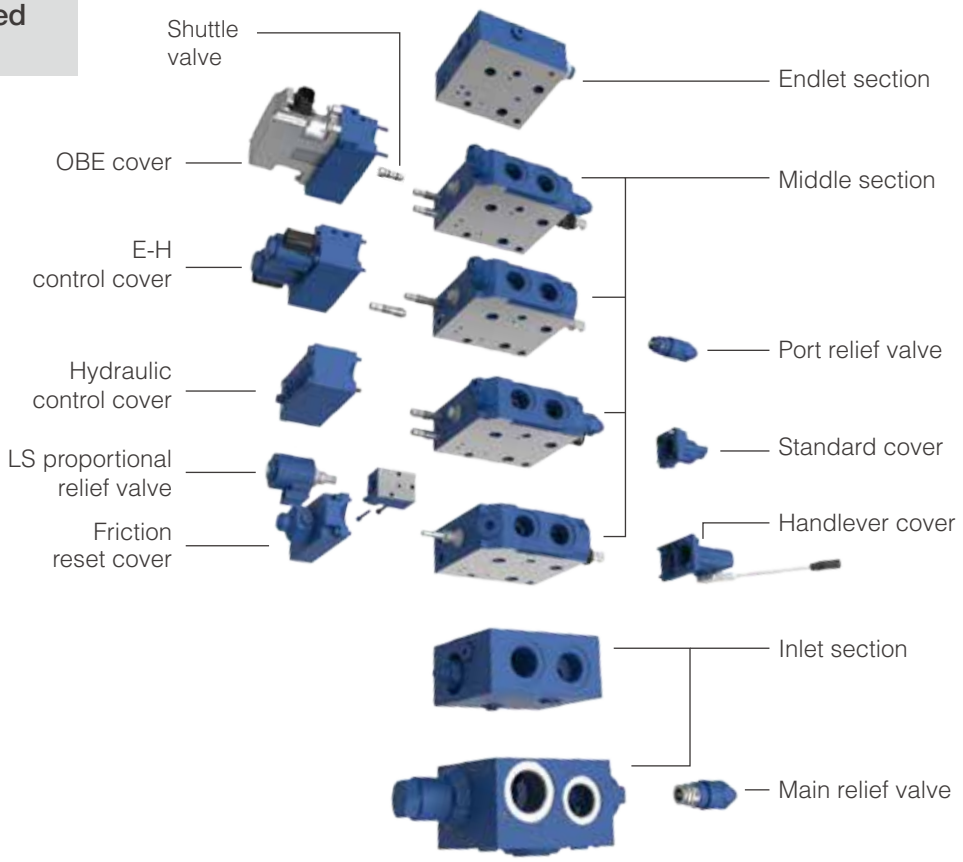

Accurate electro-hydraulic closed loop control, comparable to servo valve performance

On-board electronics: OBE

The internal closed loop positon control configuration of the OBE control cover makes the valve spool achieve the desired postion with accuracy levels approaching the performance of a servo- valve, by continuously comparing the set-point of a remote control device (poteniometer, joystick , plc) with the feedback signal generated by a high precision hall effect position transducer.

Choice between different types of control:

1. Analog control (0 – 5V), with following auxiliary signals available:
   - Spool postion feedback
   - 5V for external potentiometer or joystick
2. CANbus control (J1939 or CANopen protocols)

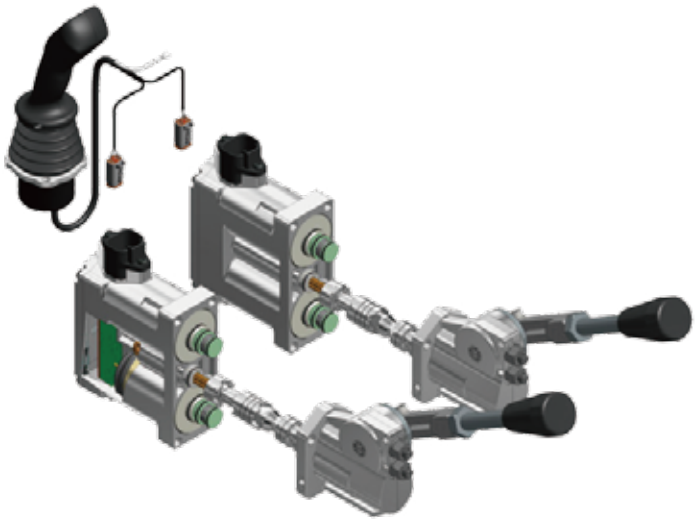

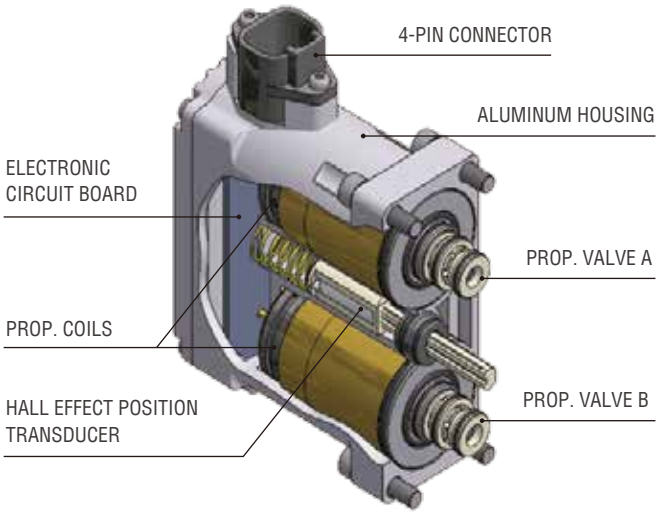

SPOOL STROKE A

When the input voltage signal fed to the MLTFD5 actuator is maintained within 2.25 and 2.75V, the directional valve spool is at rest (Neutral Dead Band). When Vin = 2.75V, the spool steps up from NEUTRAL to MINIMUM FLOW control position. A linear ramp from MIN. to MAX. spool stroke will follow by increasing Vin from 2.75 to4.1V. At Vin = 4.50V, the spool is brought into its FLOAT POSITION, if present. By decreasing the input voltage from 4.1 to 2.75V, the spool stroke is linearly reduced and after the oil flow is fully shutoff, a step-down from MINIMUM FLOW to NEUTRAL position takes place.

SPOOL STROKE B

Same as for STROKE A, by varying Vin from 2.25 to 0.9V, the spool will go from NEUTRAL to MAX. STROKE in the opposite direction.

ALARM / FAIL - SAFE MODE

An input voltage variation beyond the calibration range (<0.25V or >4.75V) will bring the system into an ALARM mode, urging the spool to return to its NEUTRAL position until Vin is brought back to its nominal control range.

Spool Stroke (mm) VS Input Voltage Signal (Volt DC)

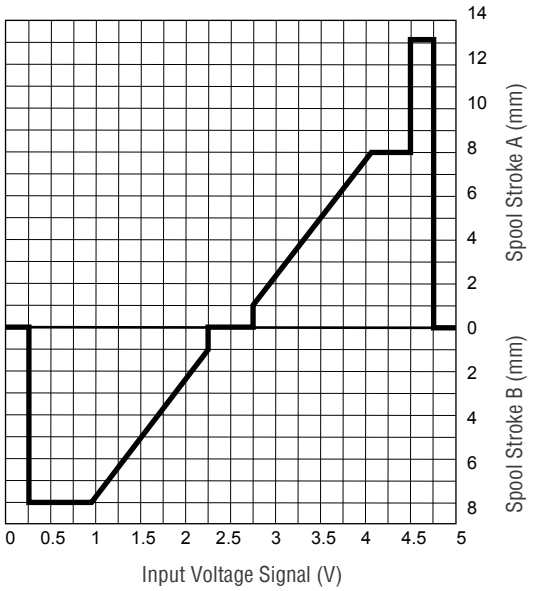

HENGLI HYDRAULIC

As a benchmarking company of Chinese high-end hydraulic transmission industry, Hengli Hydraulic is always devoting to the innovation and development in the following four areas: production design, manufacturing process, quality improvement and management improvement. We, Hengli Hydraulic, is making effort to realize the intelligent manufacture at the same time the high-efficiency and energy saving of the hydraulic components and try to reshape the "Made in China" image through technology innovation. Meanwhile we are committed to creating a new pattern of the world's hydraulics industry and contribute to global technological innovation.

Hengli Hydraulic is dedicated to designing and developing hydraulic transmission products and solutions that meet the real needs of local customers for the global market based on the diverse market demands, in particular the field of mobile machinery and tunnel engineering. We, Hengli Hydraulic, take advantage of our years of application experience to provide the customer the most optimized solutions, thus establish strong partnerships with our customers and maintain a sustainable development in a competitive market.

What we provide

- Hydraulic Cylinder
- Hydraulic Piston Pump & Motor
- Hydraulic Control Valve for Mobile Machinery
- Industrial Valve
- Hydraulic Pump Unit and System
- High performance Hydraulic Test Bench
- High-precision Casting
- Pneumatic Components and integrated System
- Cold-drawn Seamless Steel Pipe
- Surface Coating-Thermal Spray Treatment

For more detailed information, please visit our website at

www.henglihydraulic.com

We are looking forward to working with you!

CHINA

No.99 Longqian Road ,Wujin District,
Changzhou 213167
TEL：+86 400 101 8889
E-mail： hengli@ henglihydraulic.com

AMERICA

580 Crossroads Parkway, Bolingbrook
Illinois 60440
TEL：+01 630 995 3674
E-mail: sales@hengliamerica.com

GERMANY

Sperenberger Str. 13
12277 Berlin
TEL: +49 172 368 3463
E-mail: jacky.ding@henglihydraulic.com

JAPAN

3F, Takakuwa building1-18-13 Hamamatsu-cho
Minato-ku,Tokyo,105-0013
TEL：+81 03 6809 1696
E-mail: hl_zhaozhen@163.com